Swoop

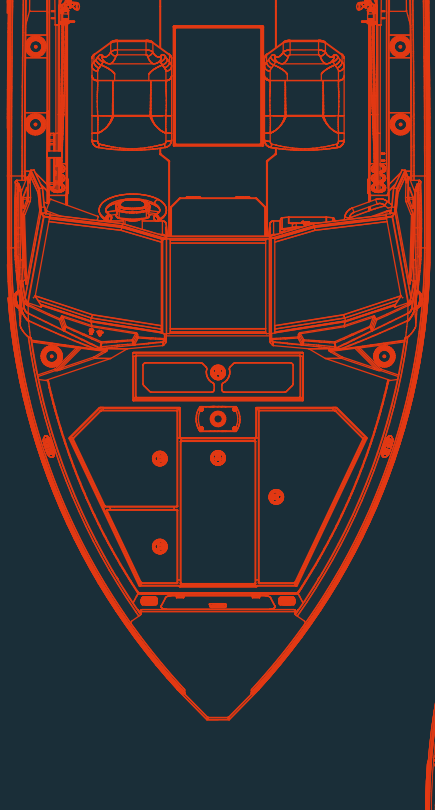

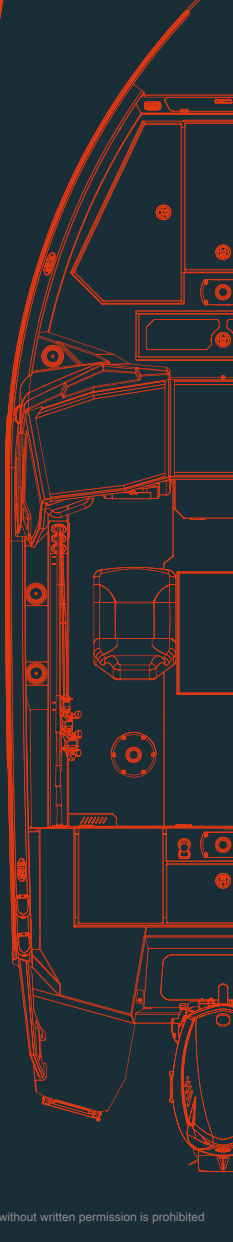

535 **Series**

585 **Series**

Boat Owner's Manual

© 2026 Swoop · v2.0 · 08.2026 · Відтворення, розповсюдження або переробка без письмового дозволу заборонені / Reproduction, distribution or adaptation without written permission is prohibited

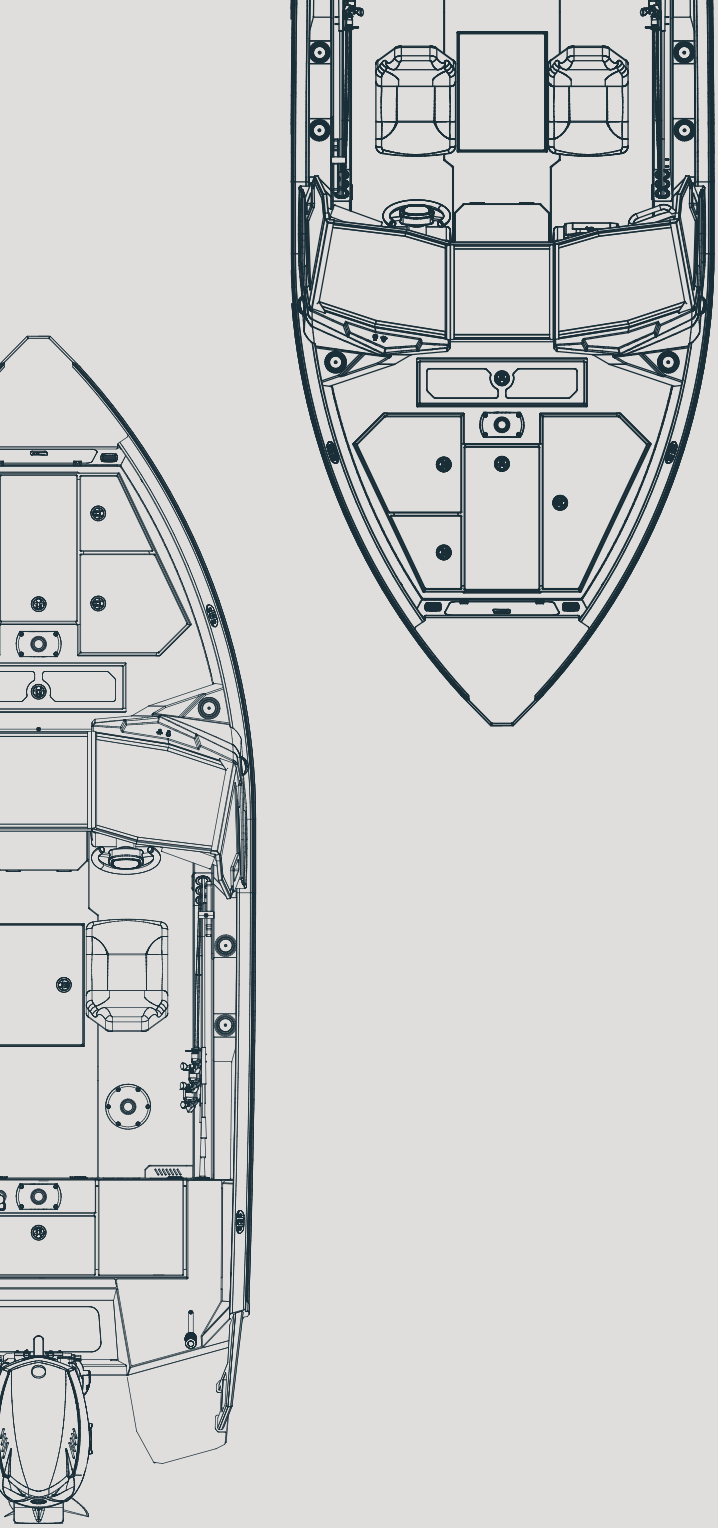

© 2026 Swoop · v2.0 · 08.2026 · Відтворення, розповсюдження або переробка без письмового дозволу заборонені / Reproduction, distribution or adaptation without written permission is prohibited

Contents

Introduction 3
Owner / Operator's responsibilities 4
Definitions 5
Guarantee 6
Boat manufacturer 6
General information 7
Boat model 7
Craft Identification Number 7
SWOOP 535 SERIES BOATS. Main Technical Specifications 8
Manufacturer's plate 9
Boat design category 9
Maximum number of persons 9
Maximum load 10
Engine 10
Schematic view of the boat 535 DC 11
Overall view 11
Fuel System of the boat 535 DC 15
Drainage System of the boat 535 DC 17
Corrugated Cable Conduits for the boat 535 DC 19
Schematic view of the boat 535 SC 21
Overall view 21
Fuel System of the boat 535 SC 25
Drainage System of the boat 535 SC 27
Corrugated Cable Conduits for the boat 535 SC 29
SWOOP 585 DC SERIES BOATS. Main Technical Specifications 31
Manufacturer's plate 32
Boat design category 32
Maximum number of persons 32
Maximum load 32
Engine 33
Schematic view of the boat **585 DC** 34
Overall view 34
Fuel System of the човна 585 DC 38
Drainage System of theчовна 585 DC 40
Corrugated Cable Conduits for the човна 585 DC 42
Schematic view of the boat 585 DC Pro 44
Overall view 44

© 2026 Swoop · v2.0 · 08.2026 · Відтворення, розповсюдження або переробка без письмового дозволу заборонені / Reproduction, distribution or adaptation without written permission is prohibited

Fuel System of the boat 585 DC Pro 48
Drainage System of the boat 585 DC Pro 50
Corrugated Cable Conduits for the boat 585 DC Pro 52

Stability and risk of flooding 55
Openings in the hul 55
Bilge pumps and bailing 55
Stability and buoyancy 56
Risk of fire or explosion 57
Refueling 57
Fire protection 57
Electrical system 58
Equipment Layout 59
Electrical diagrams 60
Operation 62
Controls 62
Starting the engine 62
Driving 63
Visibility from helm station 64
Other recommendations and guidelines 65
Man-overboard prevention and recovery 65
Securing loose equipment 65
Environment and nature considerations 66
Anchoring, mooring and towing 67
Anchoring and mooring 67
Towing 67
Trailer transportation 68
Servicing and maintenance 69
Cleaning 69
Care instructions for the remote control 69
Care instructions for the steering system 69
Care instructions for the electrical components 69
Winter storage 70
Measures before launching 70

© 2026 Swoop · v2.0 · 08.2026 · Відтворення, розповсюдження або переробка без письмового дозволу заборонені / Reproduction, distribution or adaptation without written permission is prohibited

Introduction

This manual has been compiled to help you to operate your craft with safety and pleasure. It contains details of the craft; the equipment supplied or fitted, its systems and information on their operation, set up, maintenance, prevention of risks and management of those risks. Please read carefully and familiarize yourself with the craft before using it.

This owner's manual is not a course on boating safety or seamanship. If this is your first craft, or if you are changing to a type of craft, you are not familiar with, for your own comfort and safety, please ensure that you obtain handling and operating experience before «assuming command» of the craft. Your dealer or national boating/sailing federation or yacht club will be pleased to advise you of local sea schools, or competent instructors.

Ensure that the anticipated wind and sea conditions will correspond to the design category of your craft, and that you and your crew are able to handle the craft safely in these conditions.

Even when your boat is categorized for them, the sea and wind conditions corresponding to the design categories A, B and C range from severe gale conditions for category A, to strong conditions for the top of category C, open to the hazards of a freak wave or gust. These are therefore dangerous conditions, where only a competent, fit and trained crew using a wellmaintained craft can satisfactorily operate.

This owner's manual is not a detailed maintenance or trouble-shooting guide. In the case of difficulty, refer to the boat builder or boat builder's representative. If a maintenance manual is provided, use it for the craft's maintenance.

Always use trained and competent people for maintenance, repair or modifications.

Modifications that may affect the safety characteristics of the craft shall be assessed, executed and documented by competent people. The boat builder cannot be held responsible for modifications that boat builder has not approved.

In some countries, a driving license or authorization is required, or specific regulations are in force and carriage requirements may be subject to local regulations.

Always maintain your craft properly and take into account the deterioration

© 2026 Swoop · v2.0 · 08.2026 · Відтворення, розповсюдження або переробка без письмового дозволу заборонені / Reproduction, distribution or adaptation without written permission is prohibited

that will occur over time and as a result of heavy use or misuse of the craft.

Any craft, no matter how strong it may be, can be severely damaged if not used properly. Inspect the craft regularly especially after any kind of suspected damage. Always adjust the speed and direction of the craft to sea conditions.

If your craft is fitted with a life raft, carefully read its operating manual. The craft should have onboard the appropriate safety equipment (lifejackets, harnesses, etc.) according to the type of craft, weather conditions, etc. This equipment is mandatory in some countries. The crew should be familiar with the use of all safety equipment and emergency maneuvering (man overboard recovery, towing, etc.). Sailing schools and clubs regularly organize training sessions.

All persons should wear a suitable personal floatation device (life jacket/ buoyancy aid) when on deck. Note that, in some countries, it is a legal requirement to wear a personal floatation device that complies with their national regulations.

PLEASE KEEP THIS MANUAL IN A SECURE PLACE, AND HAND IT OVER TO THE NEW OWNER WHEN YOU SELL THE CRAFT.

Owner / Operator's responsibilities

The owner / operator is responsible for the correct operation of the boat and for the safety of its occupants. Be sure that all operators read this manual before attempting to operate the boat. The passengers should be shown the location and use of all emergency equipment and one passenger should be instructed how to handle the boat in case of emergency.

It is owner/operator's responsibility to perform all safety checks and to ensure that all maintenance instructions are compiled with for maximum safety and proper operation.

© 2026 Swoop · v2.0 · 08.2026 · Відтворення, розповсюдження або переробка без письмового дозволу заборонені / Reproduction, distribution or adaptation without written permission is prohibited

Definitions

The following warning and notice signs in this manual have the meanings defined below:



DANGER

Indicates an imminently hazardous situation that, if not avoided, will result in death or serious injury.



WARNING

Indicates a potentially hazardous situation that, if not avoided, could result in death or serious injury.



CAUTION

Indicates a potentially hazardous situation that, if not avoided, could result in minor or moderate injury.



NOTICE

Indicates information considered important, but not hazardrelated, for example, relating to property damage.

The units in this manual comply with **the SI-system**. In some cases, other units have been added in brackets.

© 2026 Swoop · v2.0 · 08.2026 · Відтворення, розповсюдження або переробка без письмового дозволу заборонені / Reproduction, distribution or adaptation without written permission is prohibited

Guarantee

The guarantee is provided for the boat and factory installed equipment under the terms and conditions specified in a separate document. As for the engine and any other equipment, the equipment manufacturer is directly responsible for the guarantee.

The boat comes with separate guarantee documents for this equipment. For all other guarantee issues, please contact your dealer.

Boat manufacturer

This boat is manufactured by LCC "Swoop Manufacturing".

Address: 72 Chumatskyi Shliakh St., Obukhiv, Obukhiv District, Kyiv Region, 08700, UKRAINE

Telephone: +380 93 567 1100 (WhatsApp, Telegram, Viber)

Website: www.swoop.boats

For all matters related to operation, maintenance, warranty obligations, or service support, please contact the authorized dealer, or, if no such dealer is available, the boat manufacturer directly.

© 2026 Swoop · v2.0 · 08.2026 · Відтворення, розповсюдження або переробка без письмового дозволу заборонені / Reproduction, distribution or adaptation without written permission is prohibited

General information

Boat model

Swoop 535	DC ☐	SC ☐	Tiller ☐	
Swoop 585	DC ☐	DC Pro ☐		

Craft Identification Number

(Watercraft identification number)

Each craft is assigned a unique **Craft Identification Number (CIN)** by the manufacturer.

This number is used for:

- registration of the craft with the competent authorities;
- identification of the craft for warranty and service purposes;
- any correspondence with the manufacturer or an authorized dealer.

The Craft Identification Number is permanently affixed to the hull of the craft in accordance with applicable regulatory requirements.

Please record the CIN of your craft here:

UA-SWP __ __ __ __ __ __ __ __ __ __

© 2026 Swoop · v2.0 · 08.2026 · Відтворення, розповсюдження або переробка без письмового дозволу заборонені / Reproduction, distribution or adaptation without written permission is prohibited

Swoop 535 Series Boats

Principal data

The principal technical characteristics listed below are determined in accordance with the requirements of **ISO 8666:2020**. All values apply to the standard configuration of the craft, unless otherwise stated.

Parameter[1]	Symbol	Units	Value
Length of the hull	L_H	m	5,35
Beam of the hull	B_H	m	2,24
Depth midship	$D_{LWL/2}$	m	0,34
Deadrise at transom	β_T	deg	16,4
Draft boat in the fully loaded condition	T_C	m	0,34
Mass in the light craft condition[2]	m_{LCC}	kg	605
Mass in the fully loaded condition[3]	m_{LDC}	kg	1808
Maximum load for the builder's plate	m_{MBP}	kg	700
Maximum number of persons			5
Type of main propulsion	Outboard engine		
Tank capacities – Fuel (gasoline)[4]		litres	110

Notes:

[1] – yall sizes are measured in accordance with EN ISO 8666:2020;

[2] – this mass includes the mass of the heaviest recommended outboard engine;

[3] – this mass includes the light craft mass, the maximum load for the builder's plate, plus liquids in fixed tanks;

[4] – not all of the fuel tank capacity may be usable according to boat trim and loading.

© 2026 Swoop · v2.0 · 08.2026 · Відтворення, розповсюдження або переробка без письмового дозволу заборонені / Reproduction, distribution or adaptation without written permission is prohibited

Manufacturer's plate

The manufacturer's plate, which is fixed at the near steering position, looks like the following:

A full explanation of information shown on the builder's plate is given in the relevant sections of **this manual**.

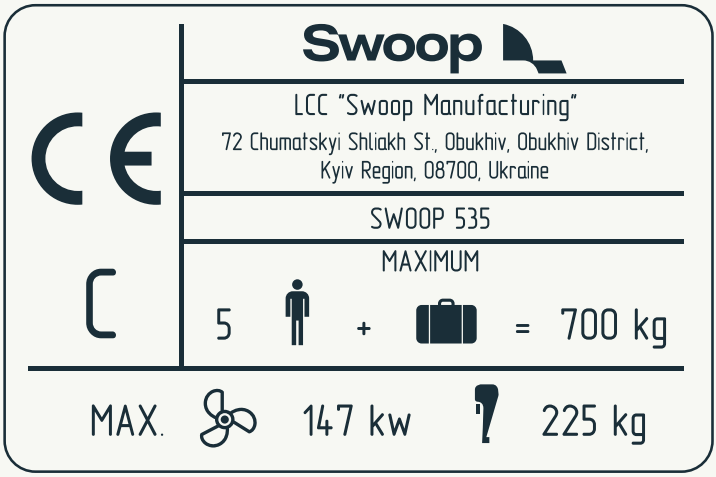

Boat design category

Category C: A craft given design category C is considered to be designed to operate in typical steady winds of Beaufort force 6 or less and the associated significant waves heights of up to 2 m.

NOTE: Typically, such conditions might be encountered on exposed inland waters, in estuaries, and in coastal waters in moderate weather conditions. Depending on atmospheric conditions, winds can gust to about 18 m/s.

Maximum number of persons

The maximum recommended number of persons for **this boat is 5**.

WARNING!

Do not exceed the maximum recommended number of persons. Regardless of the number of persons on board, the total weight of persons and equipment must never exceed the maximum recommended load.

Always use seats / seating spaces provided.

© 2026 Swoop · v2.0 · 08.2026 · Відтворення, розповсюдження або переробка без письмового дозволу заборонені / Reproduction, distribution or adaptation without written permission is prohibited

Maximum load

Maximum recommended load for the builder's plate is **700kg**.

This load includes the mass of all recommended persons onboard, all provisions and personal effects, any equipment not included in the light craft mass, **cargo (if any) minus liquids in fixed tanks**

WARNING!

When loading the boat, never exceed the maximum recommended load.

Always load the boat carefully and distribute loads appropriately to maintain design trim (approximately level). Avoid placing heavy weights high up.

Engine

Mount the engine and select the propeller in accordance with the guidelines of the engine manufacturer.

Type of engine	Outboard	
Number of engines	n	1
Maximum recommended engine(s) power	kW	85
Maximum recommended engine(s) mass	kg	189

WARNING!

It is prohibited to operate a vessel with an engine with a mass and power greater than **permissible**.

© 2026 Swoop · v2.0 · 08.2026 · Відтворення, розповсюдження або переробка без письмового дозволу заборонені / Reproduction, distribution or adaptation without written permission is prohibited

Schematic view of the boat 535 DC

Overall view

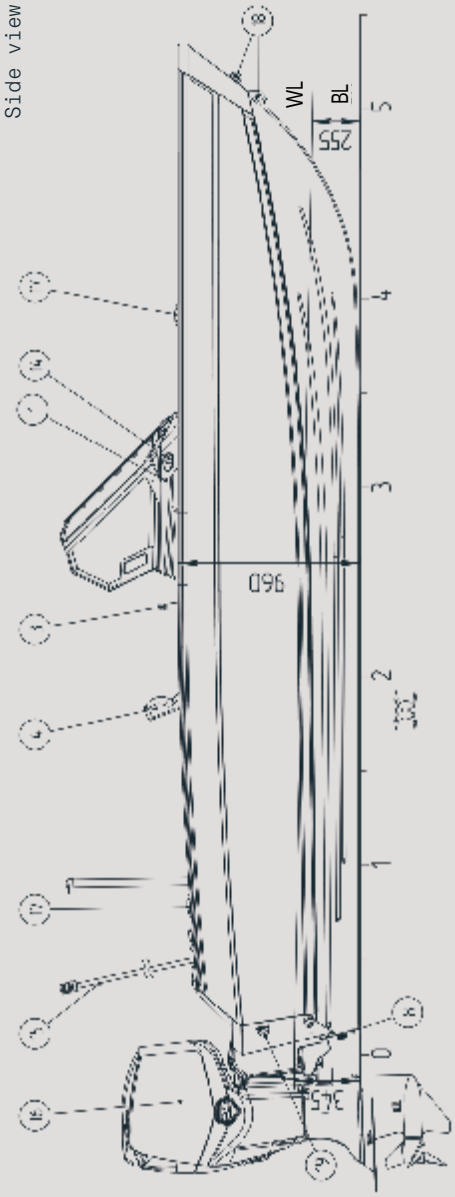

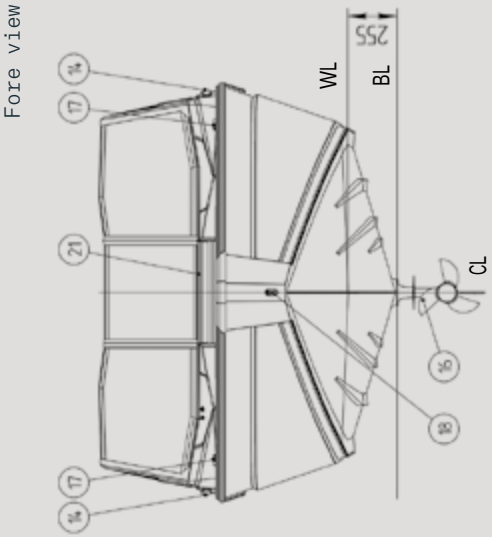

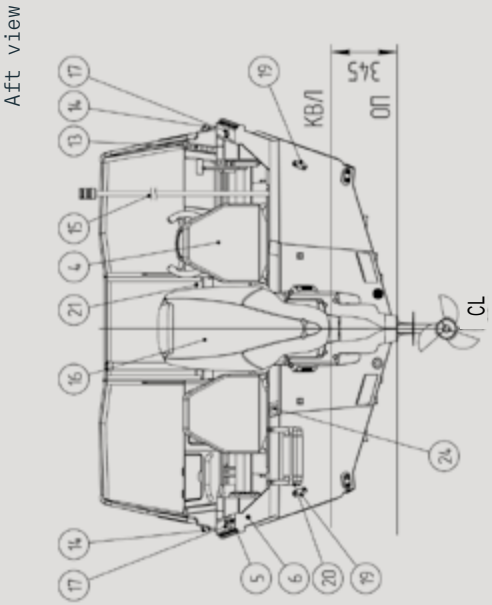

© 2026 Swoop · v2.0 · 08.2026 · Відтворення, розповсюдження або переробка без письмового дозволу заборонені / Reproduction, distribution or adaptation without written permission is prohibited

Schematic view of the boat 535 DC. Overall view

Top view

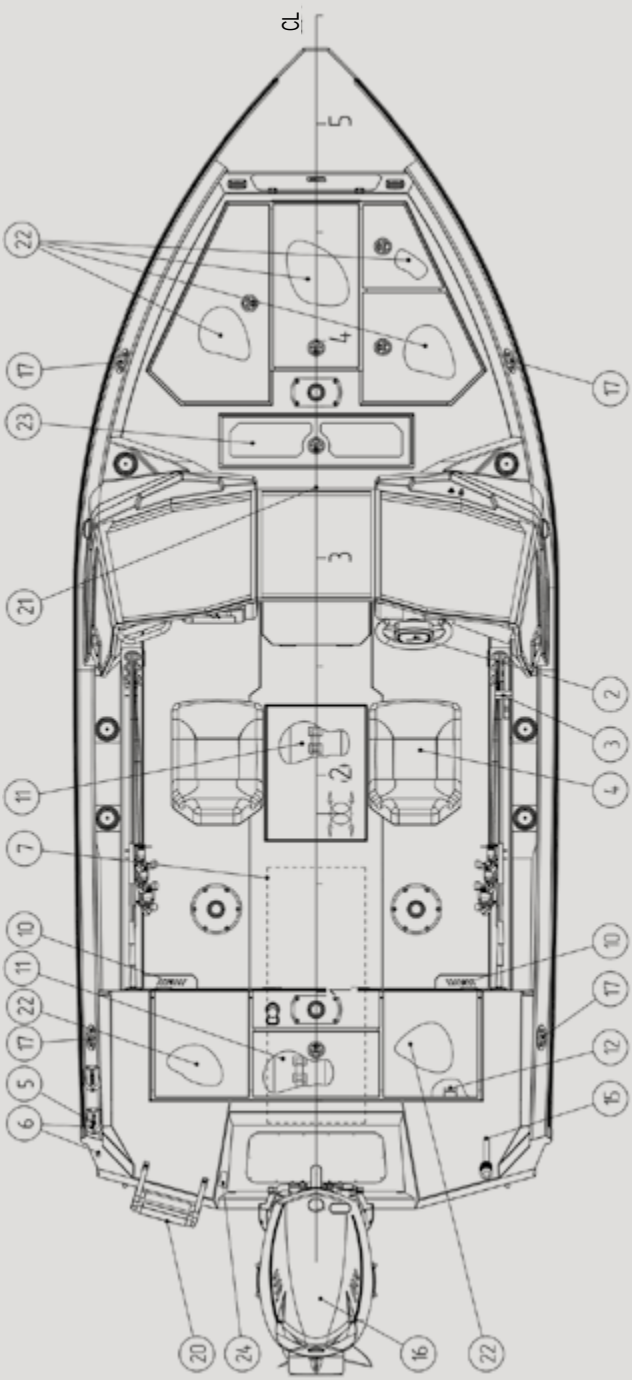

© 2026 Swoop · v2.0 · 08.2026 · Відтворення, розповсюдження або переробка без письмового дозволу заборонені / Reproduction, distribution or adaptation without written permission is prohibited

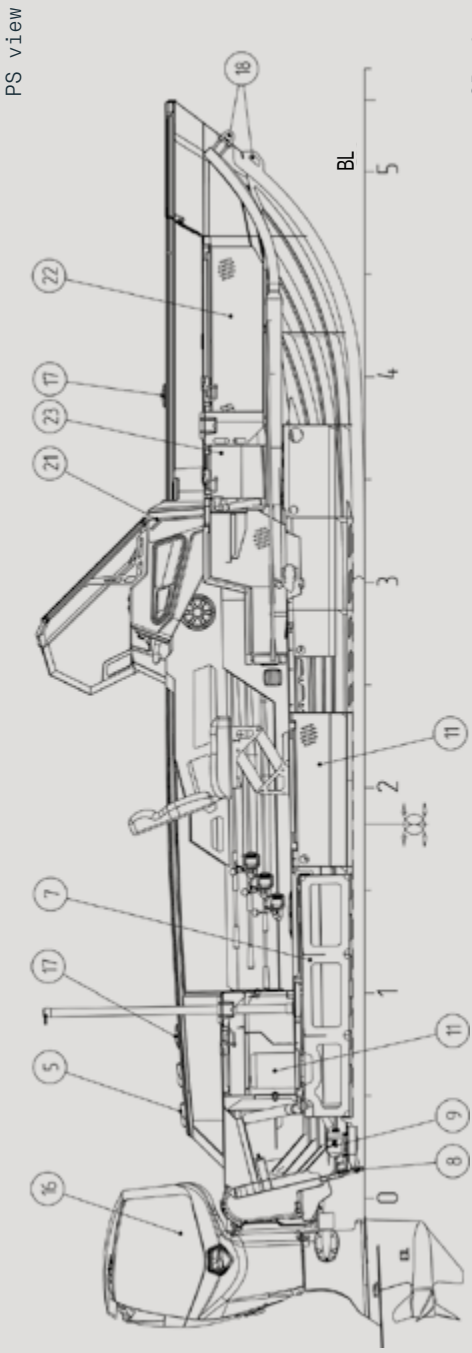

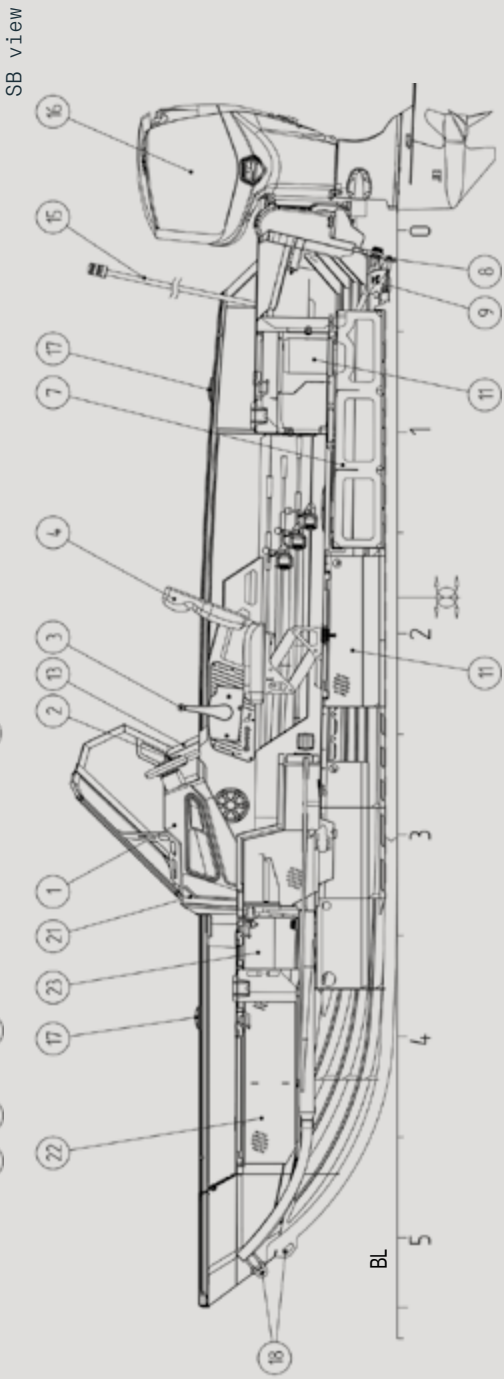

© 2026 Swoop · v2.0 · 08.2026 · Відтворення, розповсюдження або переробка без письмового дозволу заборонені / Reproduction, distribution or adaptation without written permission is prohibited

Legend

1. Console
2. Steering wheel
3. Remote control handle
4. Captain's (operator's) seat
5. Fuel tank filler neck
6. Fuel tank vent
7. Fuel tank
8. Drain plug
9. Bilge pump
10. Deck drainage system
11. Battery compartment
12. Main battery switch
13. Systems control panel
14. Navigation lights
15. All-round (anchor) light
16. Outboard engine
17. Mooring cleats
18. Bow eye
19. Stern eyes
20. Boarding ladder
21. Walk-through console
22. Storage compartments
23. Livewell
24. Builder's plate / CIN

WL - Waterline

BP - Base Plane

CL - Centerline Plane

© 2026 Swoop · v2.0 · 08.2026 · Відтворення, розповсюдження або переробка без письмового дозволу заборонені / Reproduction, distribution or adaptation without written permission is prohibited

Fuel System of the boat 535 DC

Top view

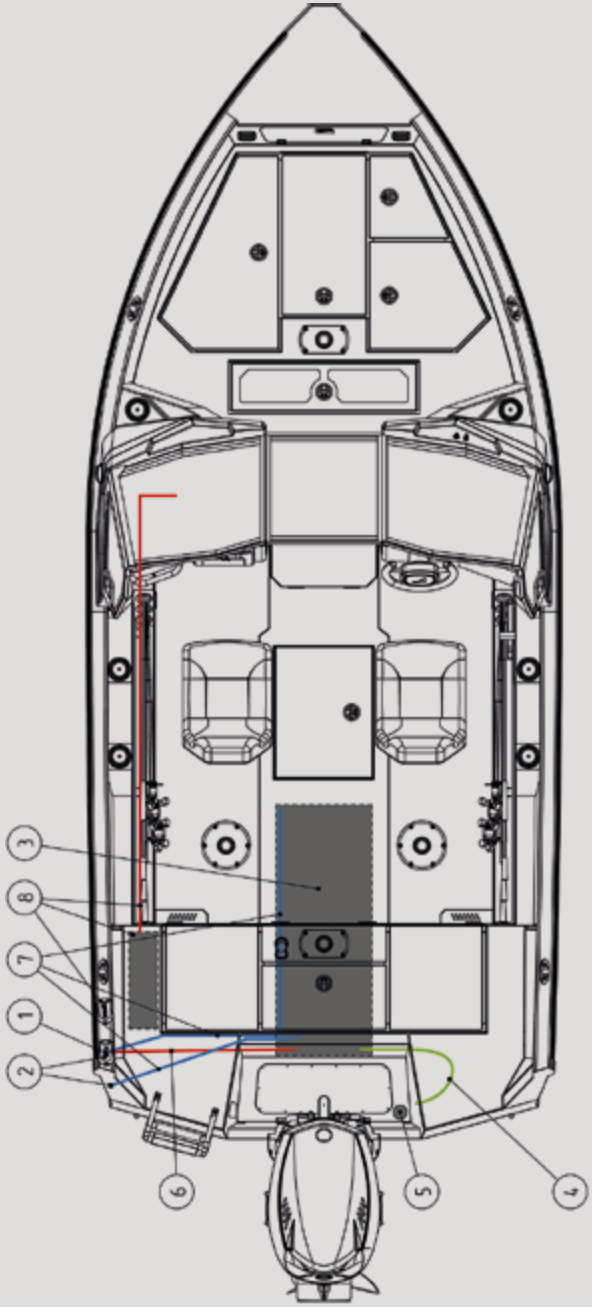

© 2026 Swoop · v2.0 · 08.2026 · Відтворення, розповсюдження або переробка без письмового дозволу заборонені / Reproduction, distribution or adaptation without written permission is prohibited

Side view

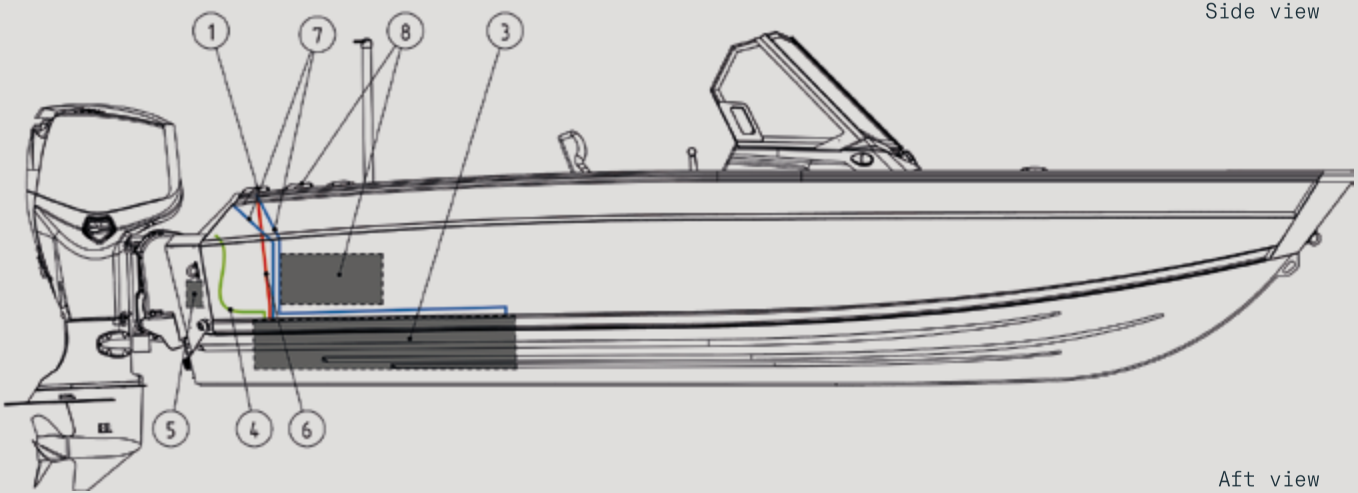

Aft view

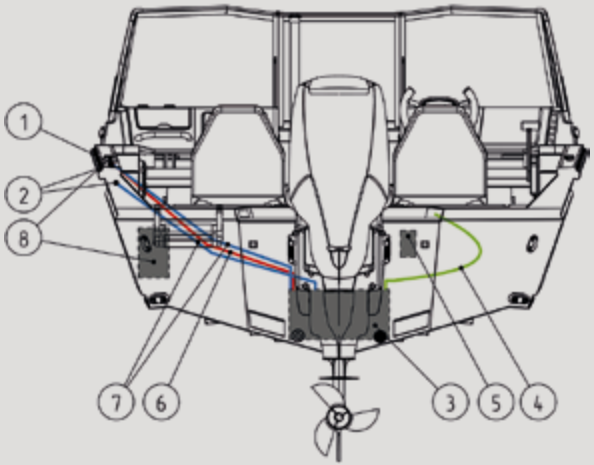

Legend

1	Fuel tank filler neck
2	Fuel tank vent
3	Fuel tank
4	Fuel outlet to engine
5	Fuel system air separator (if installed)
6	Fuel line
7	Vent line
8	Heater fuel tank and fuel lines

© 2026 Swoop · v2.0 · 08.2026 · Відтворення, розповсюдження або переробка без письмового дозволу заборонені / Reproduction, distribution or adaptation without written permission is prohibited

Drainage System of the boat 535 DC

Side view

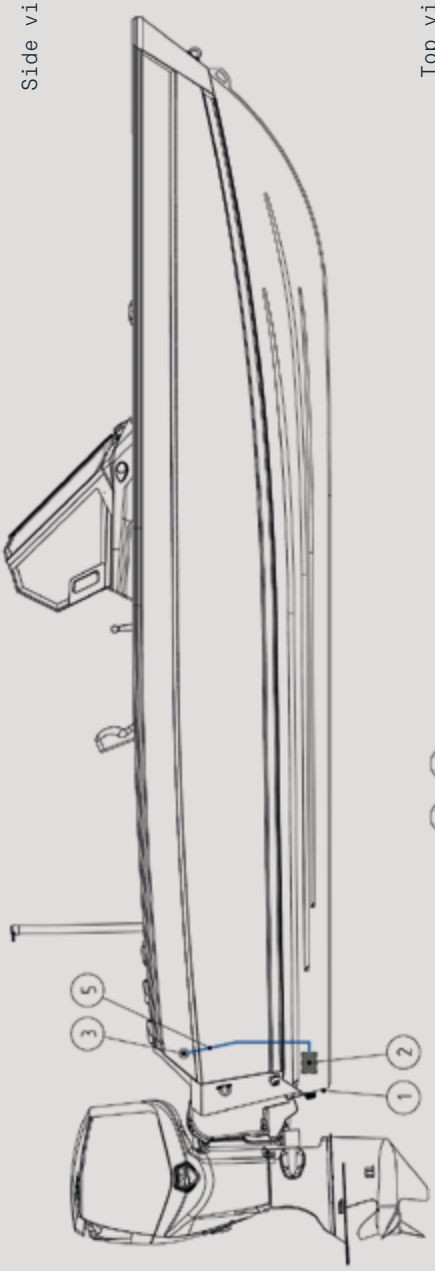

Top view

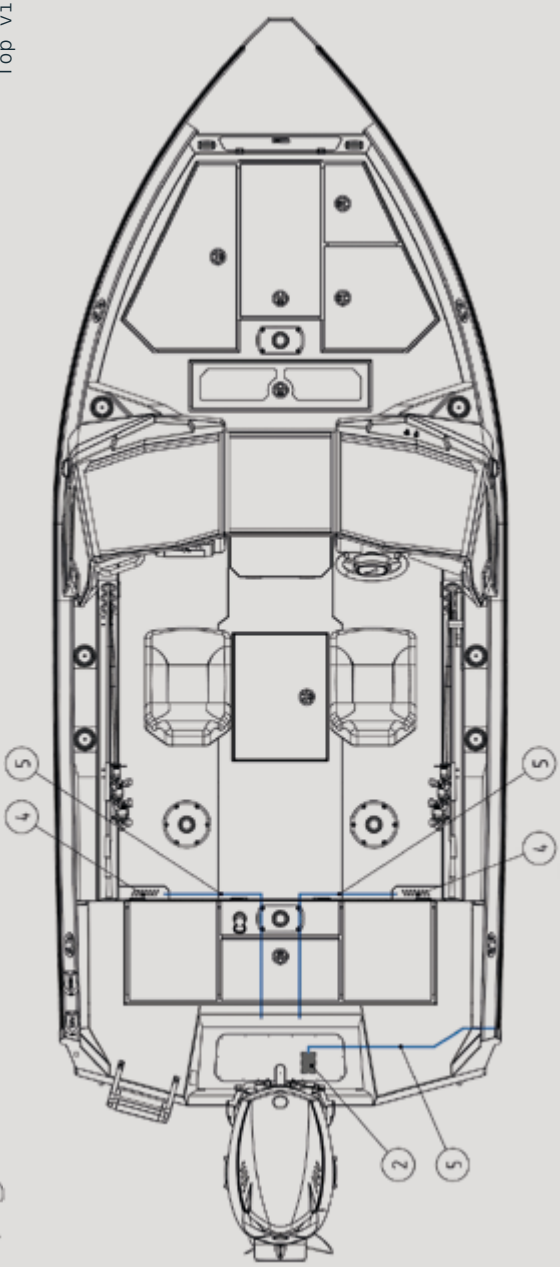

© 2026 Swoop · v2.0 · 08.2026 · Відтворення, розповсюдження або переробка без письмового дозволу заборонені / Reproduction, distribution or adaptation without written permission is prohibited

PS view

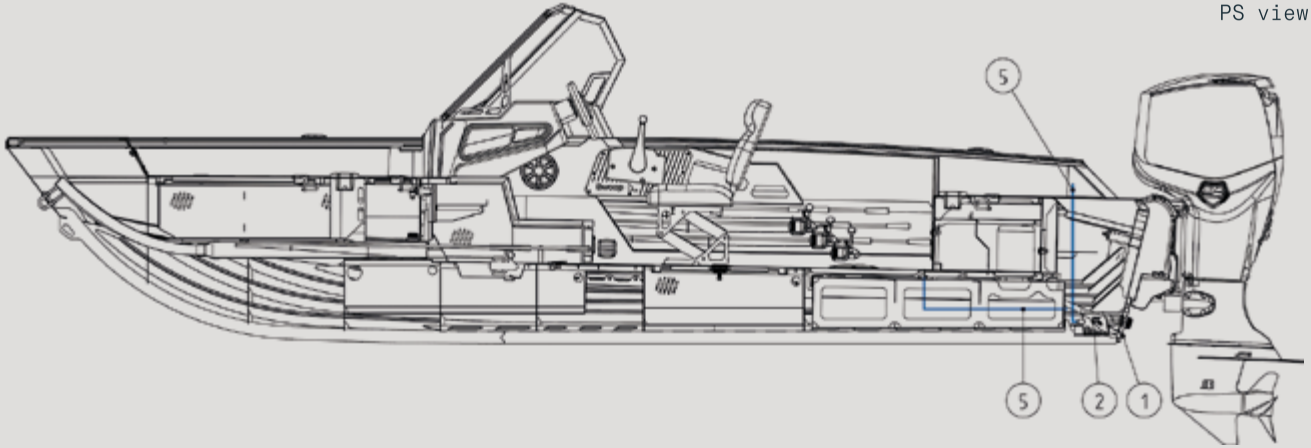

Legend

1. Drain plug
2. Bilge pump
3. Bilge pump discharge outlet
4. Deck / cockpit drain openings
5. Drainage line
6. Livewell intake
7. Livewell drain

Aft view

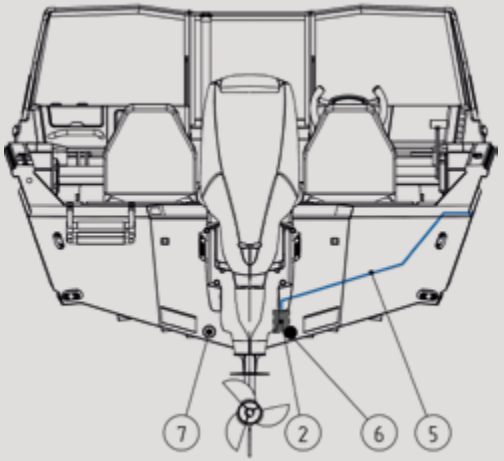

© 2026 Swoop · v2.0 · 08.2026 · Відтворення, розповсюдження або переробка без письмового дозволу заборонені / Reproduction, distribution or adaptation without written permission is prohibited

Corrugated Cable Conduits for the 535 DC Boat

PS view

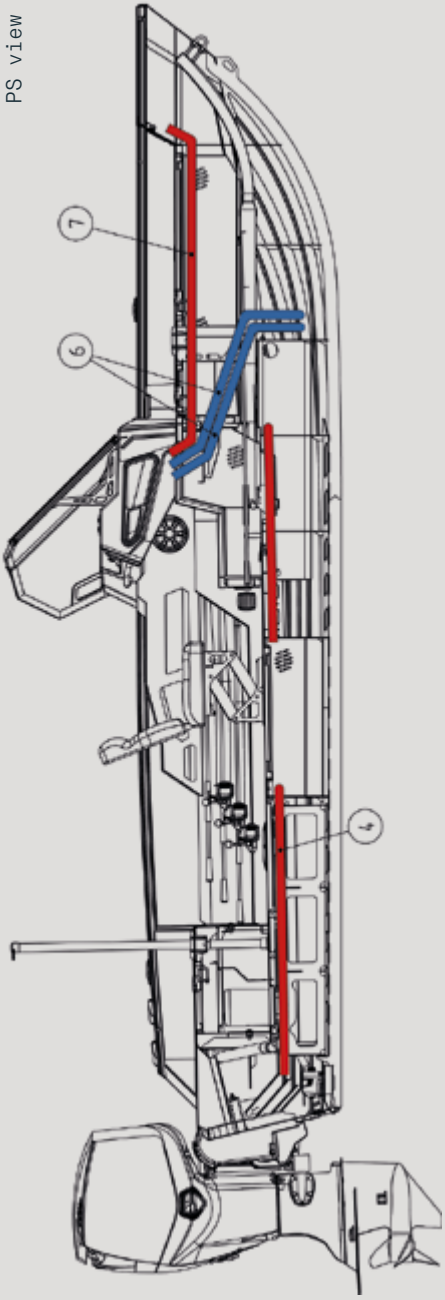

SB view

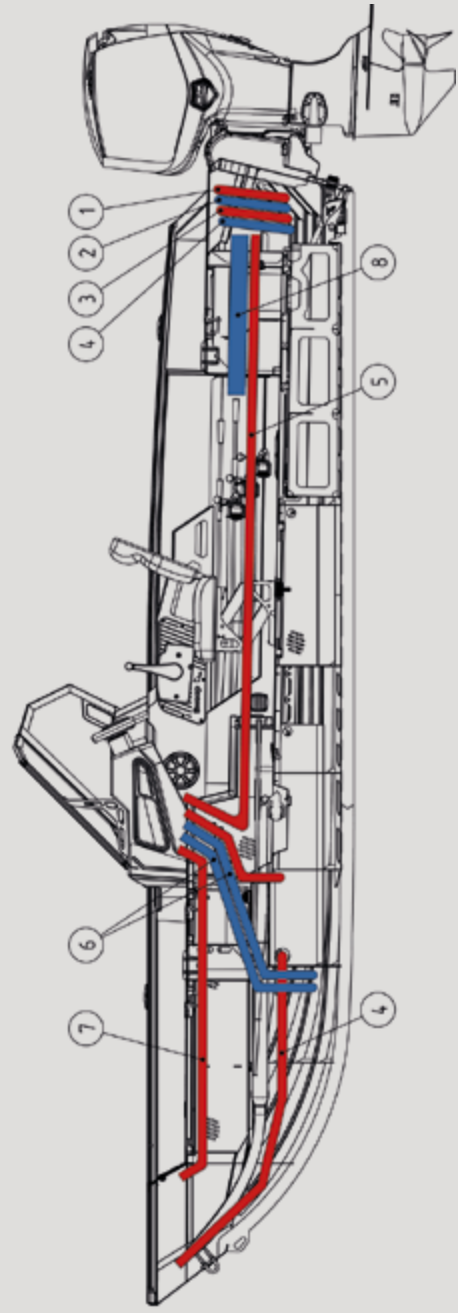

© 2026 Swoop · v2.0 · 08.2026 · Відтворення, розповсюдження або переробка без письмового дозволу заборонені / Reproduction, distribution or adaptation without written permission is prohibited

© 2026 Swoop · v2.0 · 08.2026 · Відтворення, розповсюдження або переробка без письмового дозволу заборонені / Reproduction, distribution or adaptation without written permission is prohibited

Swoop

Schematic view of the boat 535 DC. Corrugated Cable Conduits

Top view

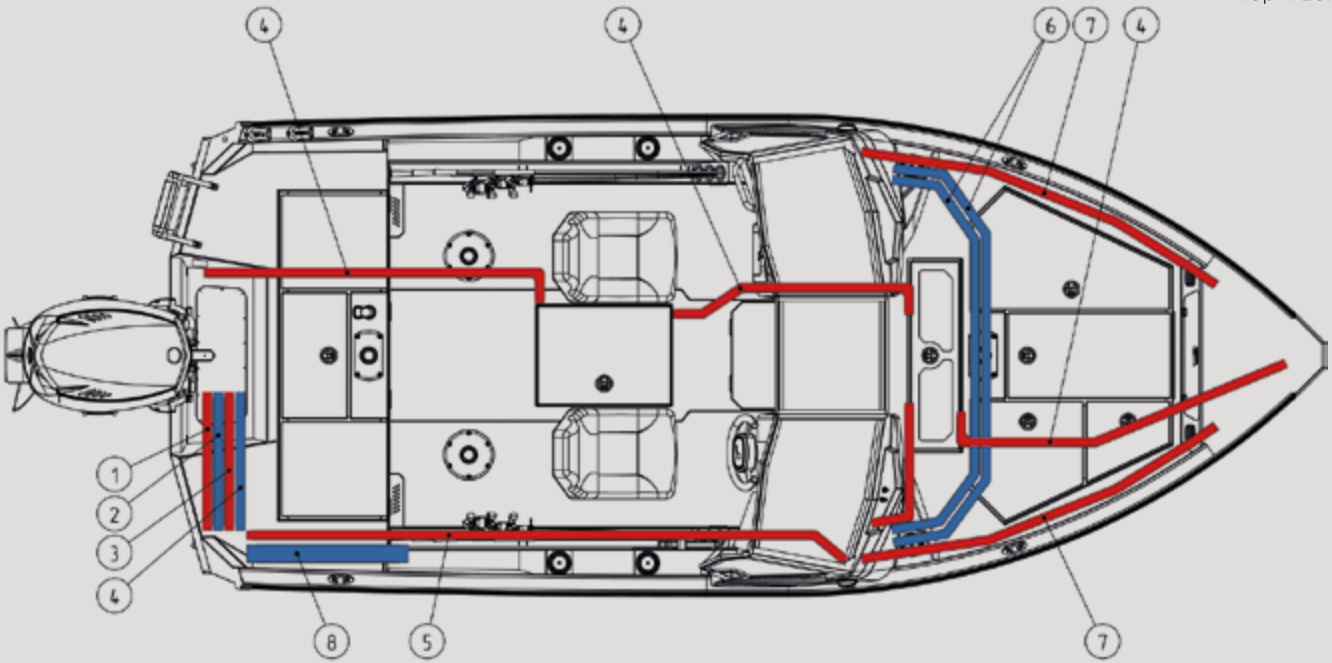

Legend

1	Bilge pump
2	Fuel supply
3	Battery switch and other systems
4	Battery power cables
5	Livewell pump and other systems
6	Inter-console conduits
7	Driver’s console and bow compartment
8	Main engine communication conduit

Schematic view of the boat 535 SC

Overall view

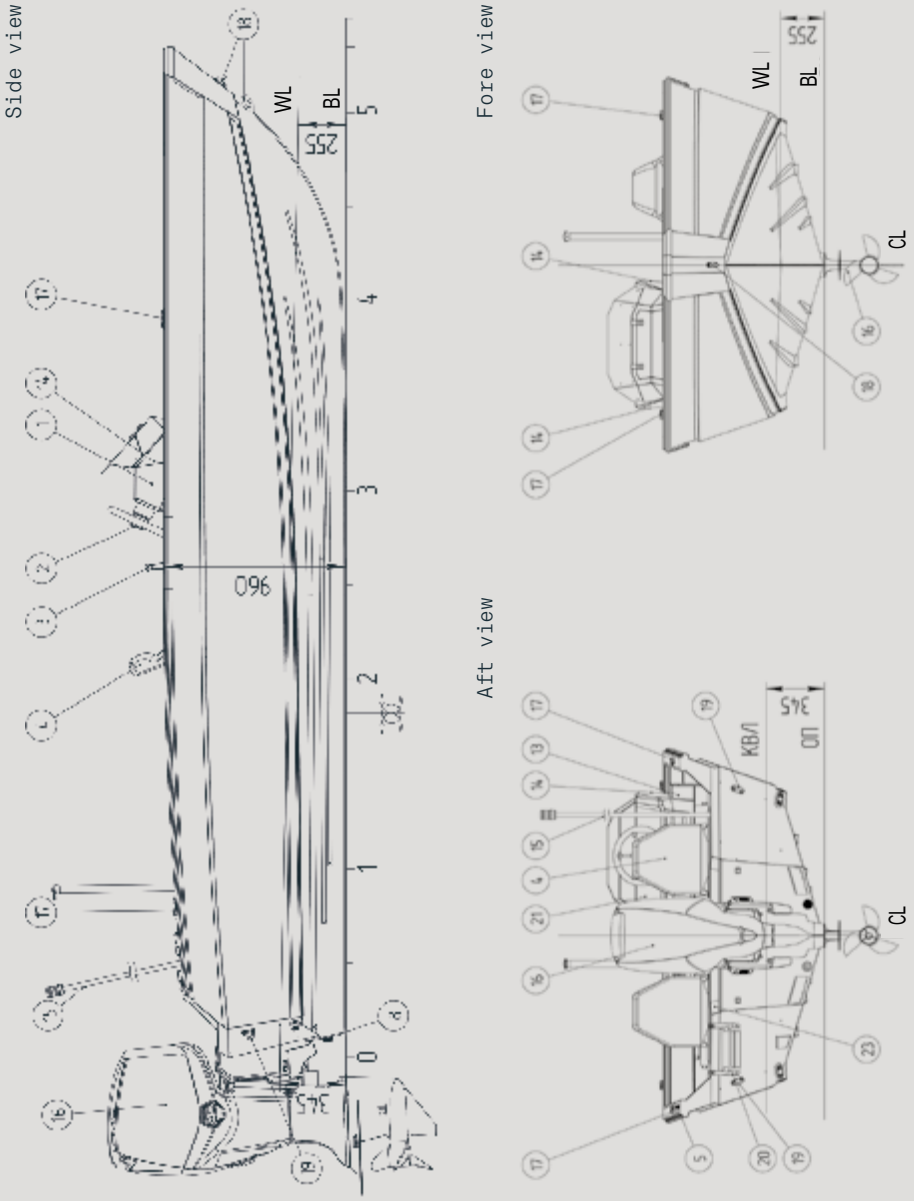

© 2026 Swoop · v2.0 · 08.2026 · Відтворення, розповсюдження або переробка без письмового дозволу заборонені / Reproduction, distribution or adaptation without written permission is prohibited

Schematic view of the boat 535 SC. Overall view

Top view

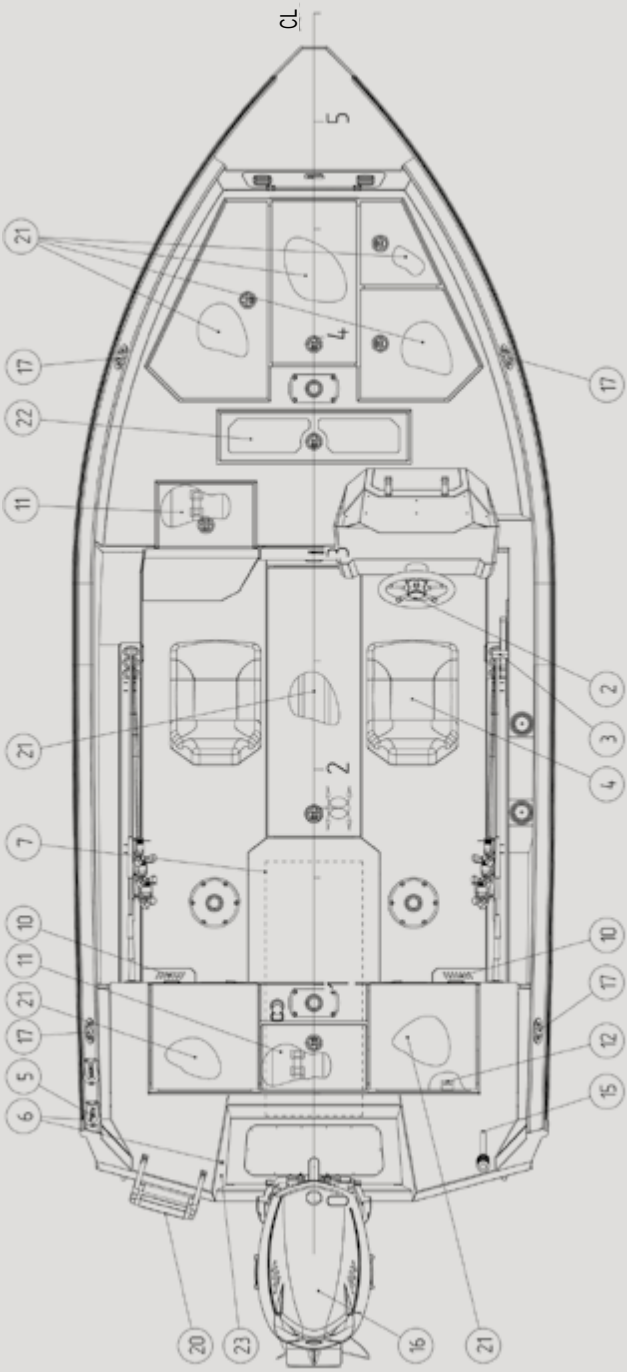

© 2026 Swoop · v2.0 · 08.2026 · Відтворення, розповсюдження або переробка без письмового дозволу заборонені / Reproduction, distribution or adaptation without written permission is prohibited

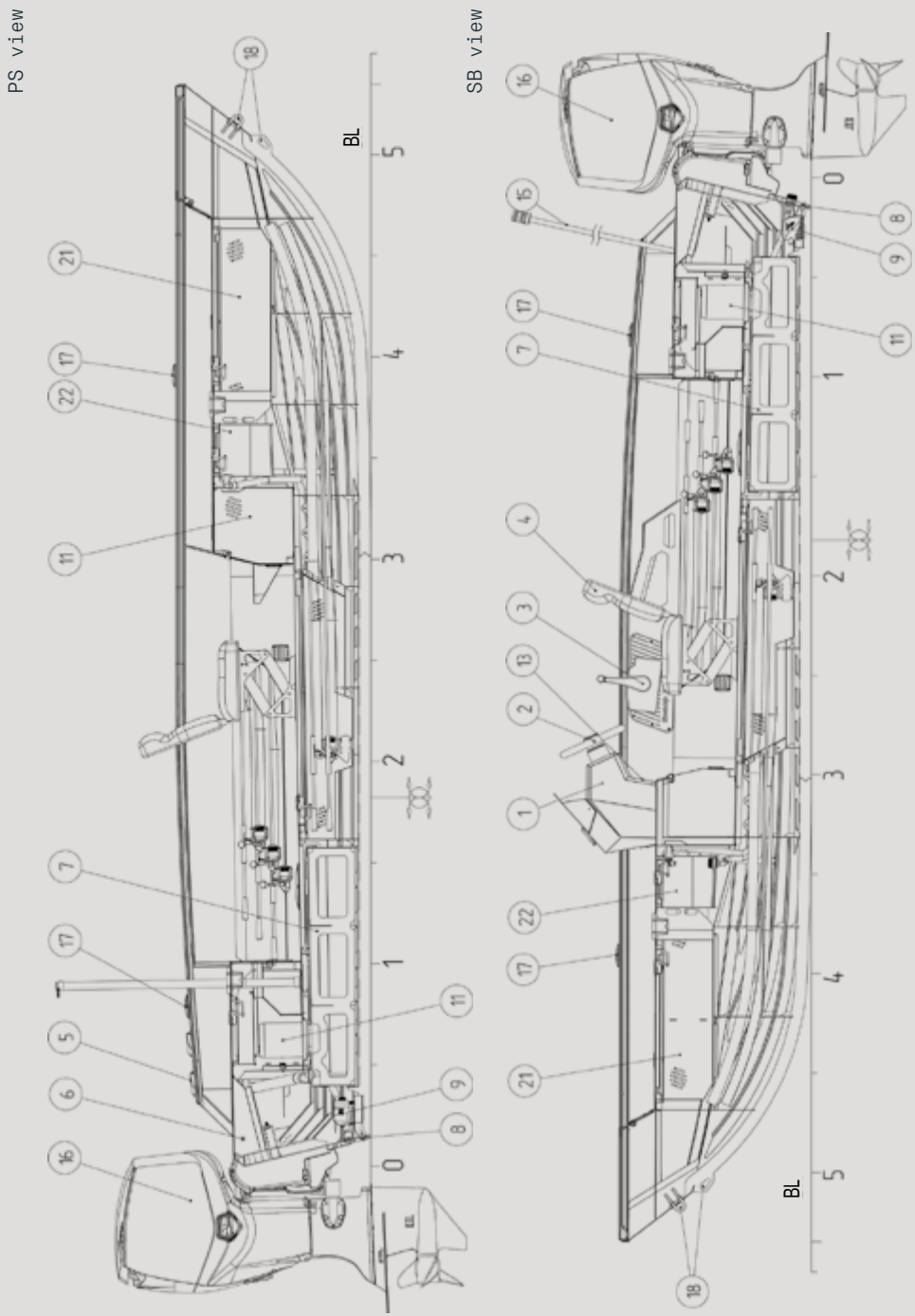

© 2026 Swoop · v2.0 · 08.2026 · Відтворення, розповсюдження або переробка без письмового дозволу заборонені / Reproduction, distribution or adaptation without written permission is prohibited

Legend

Schematic view of the boat 535 SC. Overall view

1. Console
2. Steering wheel
3. Remote control handle
4. Captain’s (operator’s) seat
5. Fuel tank filler neck
6. Fuel tank vent
7. Fuel tank
8. Drain plug
9. Bilge pump
10. Deck drainage system
11. Battery compartment
12. Main battery switch
13. Systems control panel
14. Navigation lights
15. All-round (anchor) light
16. Outboard engine
17. Mooring cleats
18. Bow eye
19. Stern eyes
20. Boarding ladder
21. Storage compartments
22. Livewell
23. Builder’s plate / CIN

WL - Waterline

BP - Base Plane

CL - Centerline Plane

© 2026 Swoop · v2.0 · 08.2026 · Відтворення, розповсюдження або переробка без письмового дозволу заборонені / Reproduction, distribution or adaptation without written permission is prohibited

Fuel System of the 535 SC Boat

Top view

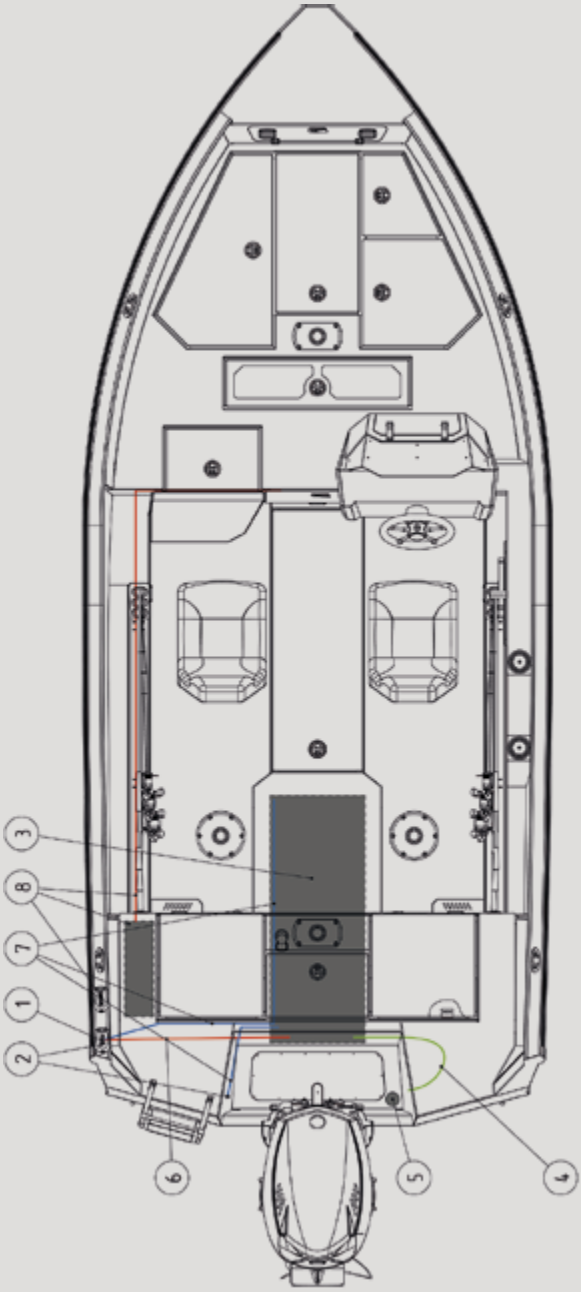

© 2026 Swoop · v2.0 · 08.2026 · Відтворення, розповсюдження або переробка без письмового дозволу заборонені / Reproduction, distribution or adaptation without written permission is prohibited

Side view

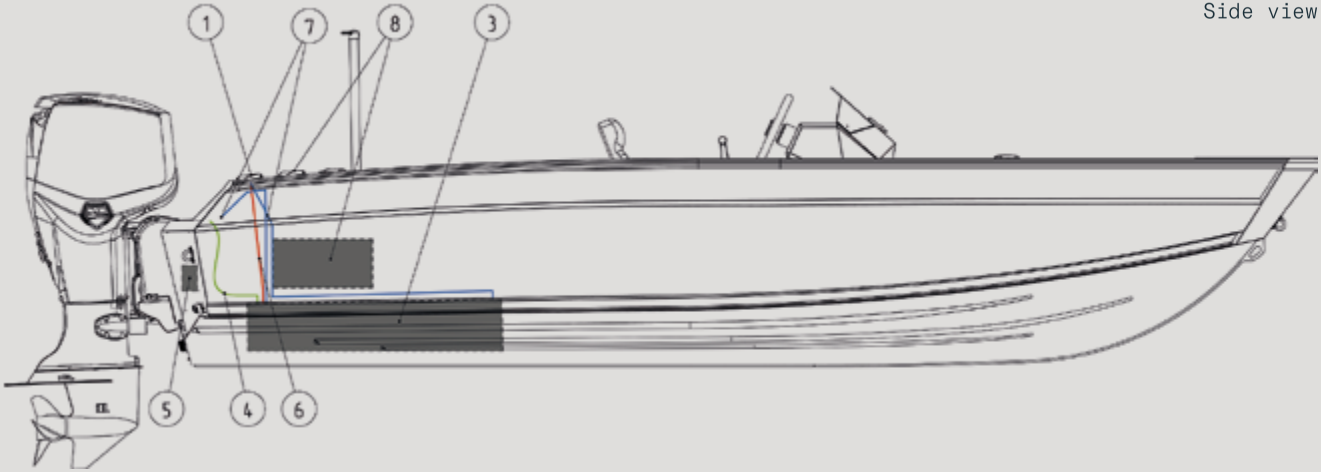

Legend

1	Fuel tank filler neck
2	Fuel tank vent
3	Fuel tank
4	Fuel outlet to engine
5	Fuel system air separator (if installed)
6	Fuel line
7	Fuel line

Aft view

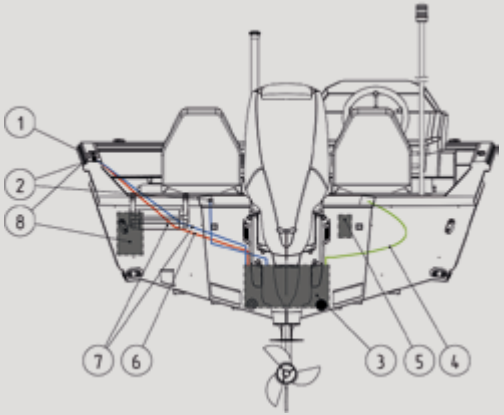

© 2026 Swoop · v2.0 · 08.2026 · Відтворення, розповсюдження або переробка без письмового дозволу заборонені / Reproduction, distribution or adaptation without written permission is prohibited

Drainage System of the 535 SC Boat

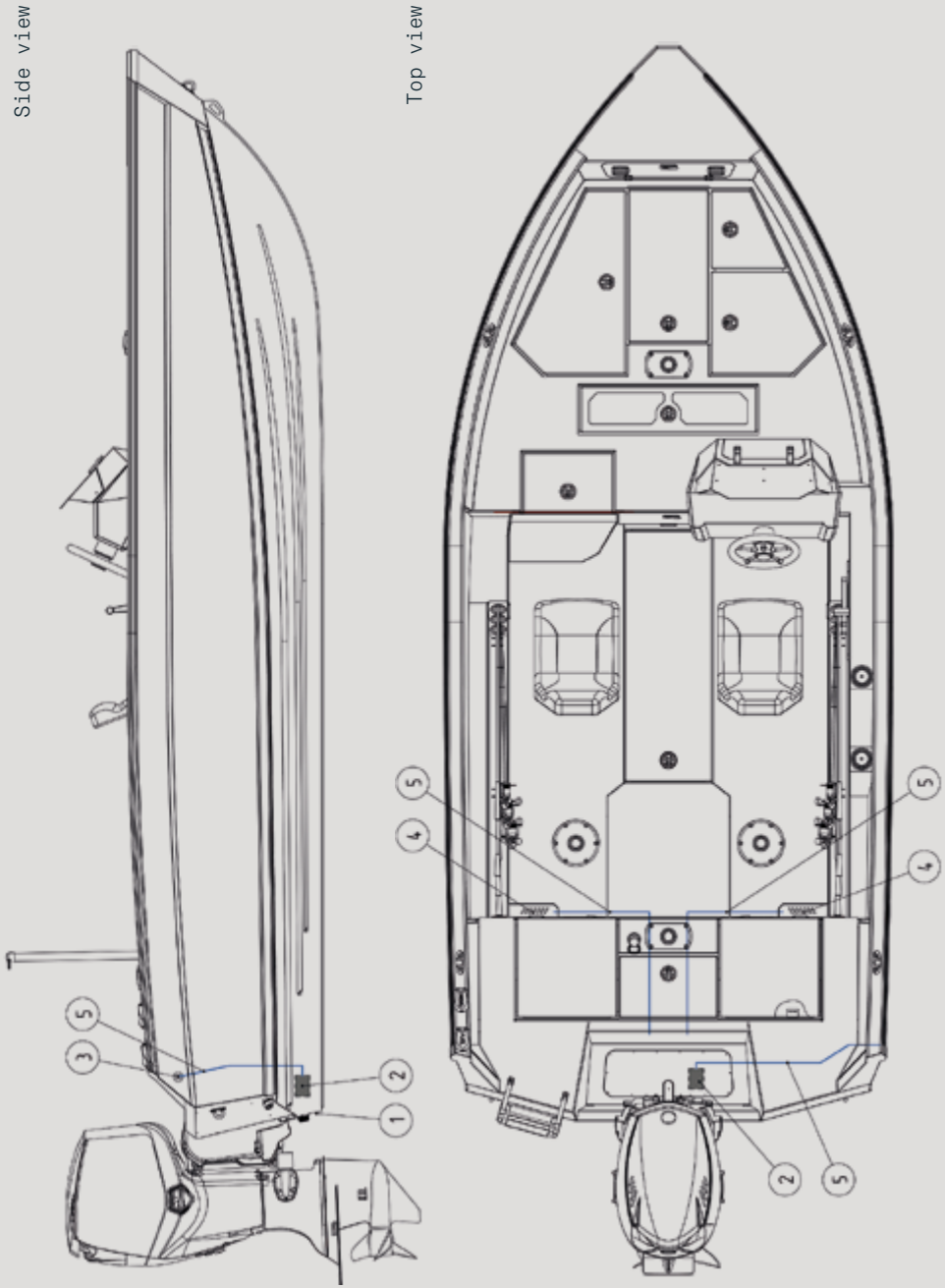

© 2026 Swoop · v2.0 · 08.2026 · Відтворення, розповсюдження або переробка без письмового дозволу заборонені / Reproduction, distribution or adaptation without written permission is prohibited

SB view

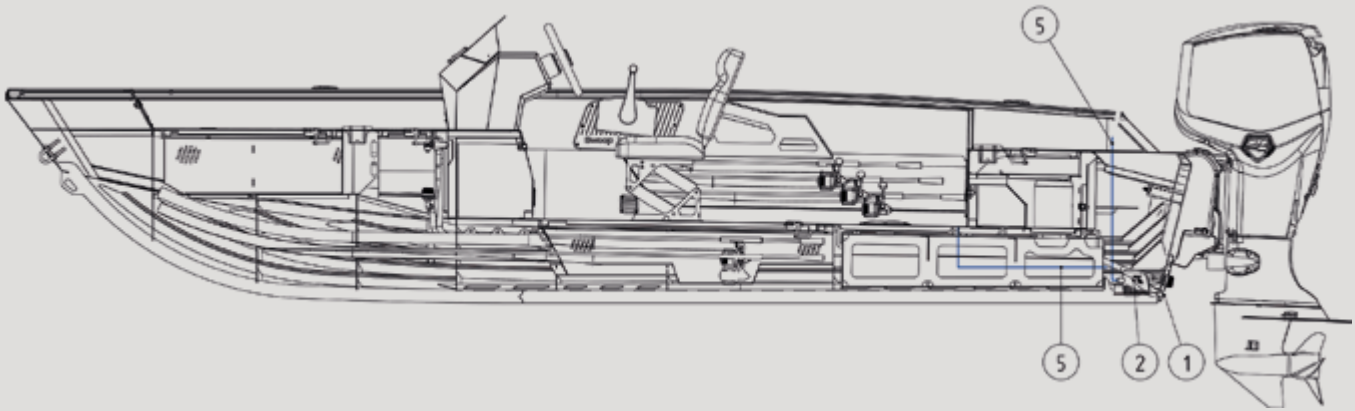

Legend

1	Drain plug
2	Bilge pump
3	Bilge pump discharge outlet
4	Deck / cockpit drain openings
5	Drainage line
6	Livewell intake
7	Livewell drain

Aft view

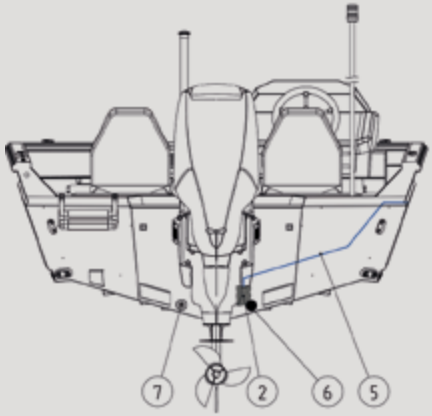

© 2026 Swoop · v2.0 · 08.2026 · Відтворення, розповсюдження або переробка без письмового дозволу заборонені / Reproduction, distribution or adaptation without written permission is prohibited

Corrugated Cable Conduits for the 535 SC Boat

PS view

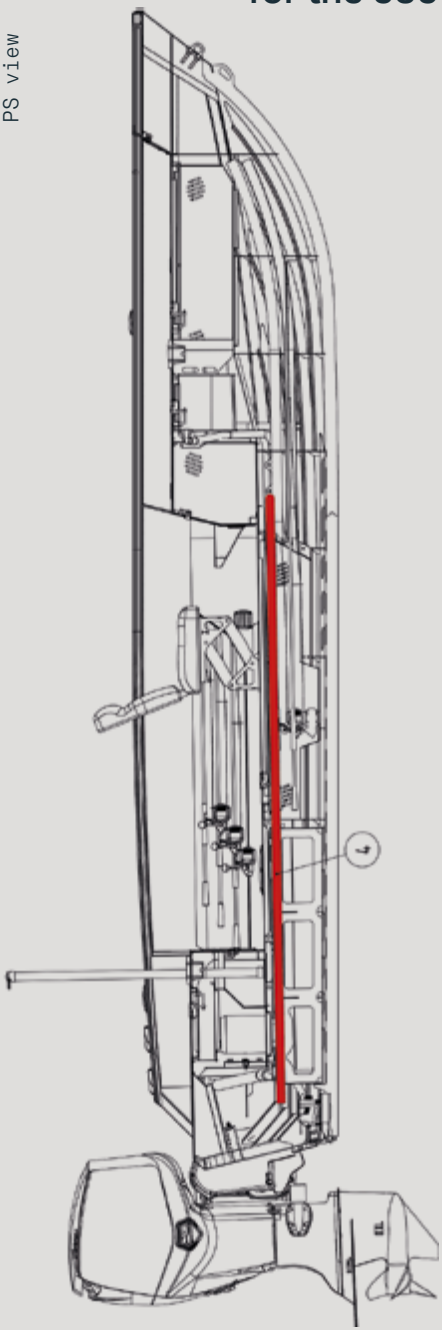

SB view

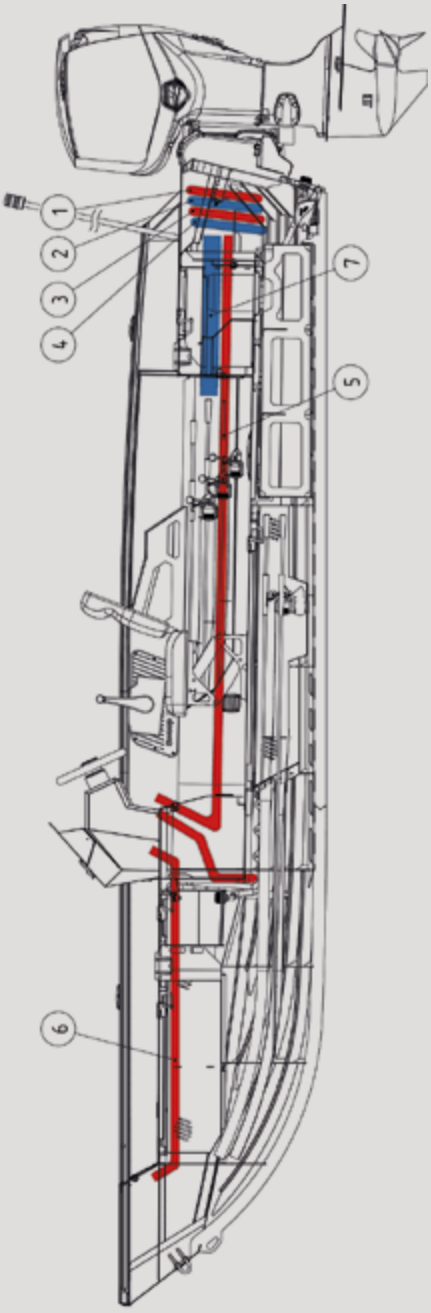

© 2026 Swoop · v2.0 · 08.2026 · Відтворення, розповсюдження або переробка без письмового дозволу заборонені / Reproduction, distribution or adaptation without written permission is prohibited

Top view

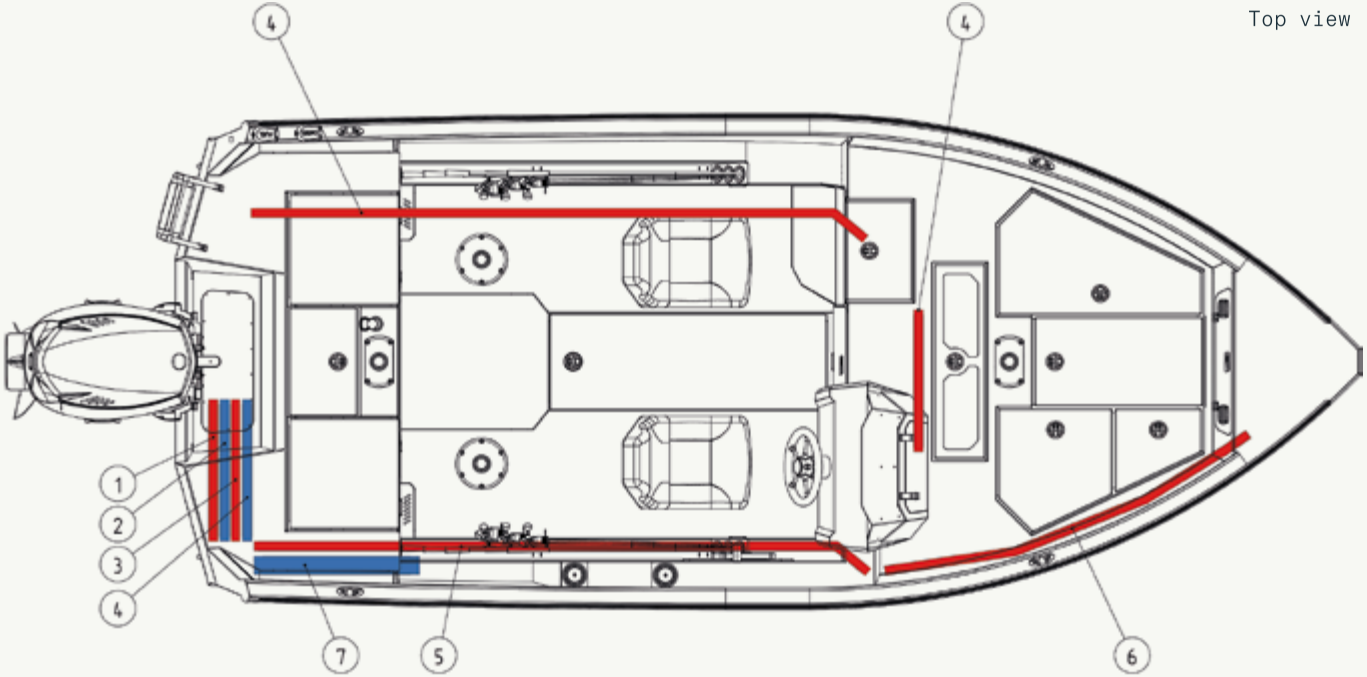

Legend

1. Bilge pump
2. Fuel supply
3. Battery switch and other systems
4. Battery power cables
5. Livewell pump and other systems
6. Driver’s console and bow compartment
7. Main engine communication conduit

© 2026 Swoop · v2.0 · 08.2026 · Відтворення, розповсюдження або переробка без письмового дозволу заборонені / Reproduction, distribution or adaptation without written permission is prohibited

Swoop 585 Series Boats

Principal data

The principal technical characteristics listed below are determined in accordance with the requirements of **ISO 8666:2020**. All values apply to the standard configuration of the craft, unless otherwise stated.

Parameter[1]	Symbol	Units	Value
Length of the hull	L_H	m	5,8
Beam of the hull	B_H	m	2,24
Depth midship	$D_{LWL/2}$	m	0,35
Deadrise at transom	β_T	deg	16,4
Draft boat in the fully loaded condition	T_C	m	0,34
Mass in the light craft condition[2]	m_{LCC}	kg	625
Mass in the fully loaded condition[3]	m_{LDC}	kg	1100
Maximum load for the builder's plate	m_{MBP}	kg	978
Maximum number of persons			5
Type of main propulsion	Outboard engine		
Tank capacities – Fuel (gasoline)[4]		litres	110

Примітки:

Notes:

[1] – yall sizes are measured in accordance with EN ISO 8666:2020;

[2] – this mass includes the mass of the heaviest recommended outboard engine;

[3] – this mass includes the light craft mass, the maximum load for the builder's plate, plus liquids in fixed tanks;

[4] – not all of the fuel tank capacity may be usable according to boat trim and loading.

© 2026 Swoop · v2.0 · 08.2026 · Відтворення, розповсюдження або переробка без письмового дозволу заборонені / Reproduction, distribution or adaptation without written permission is prohibited

Manufacturer's plate

The manufacturer's plate, which is fixed at the near steering position, looks like the following:

A full explanation of information shown on the builder's plate is given in the relevant sections of **this manual**.

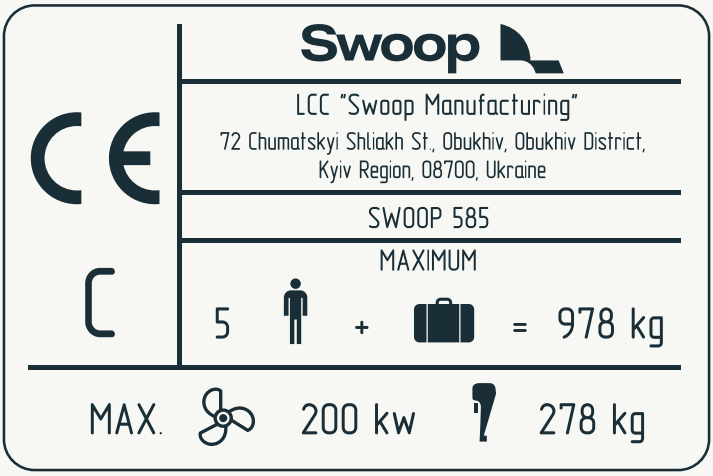

Boat design category

Category C: A craft given design category C is considered to be designed to operate in typical steady winds of Beaufort force 6 or less and the associated significant waves heights of up to 2 m.

NOTE: Typically, such conditions might be encountered on exposed inland waters, in estuaries, and in coastal waters in moderate weather conditions. Depending on atmospheric conditions, winds can gust to about 18 m/s.

Maximum number of persons

The maximum recommended number of persons for **this boat is 5**.

WARNING!

Do not exceed the maximum recommended number of persons. Regardless of the number of persons on board, the total weight of persons and equipment must never exceed the maximum recommended load.

Always use seats / seating spaces provided.

© 2026 Swoop · v2.0 · 08.2026 · Відтворення, розповсюдження або переробка без письмового дозволу заборонені / Reproduction, distribution or adaptation without written permission is prohibited

Maximum load

Maximum recommended load for the builder's plate is **700 кг**.

This load includes the mass of all recommended persons onboard, all provisions and personal effects, any equipment not included in the light craft mass, **cargo (if any) minus liquids in fixed tanks**.

WARNING!

When loading the boat, never exceed the maximum recommended load.

Always load the boat carefully and distribute loads appropriately to maintain design trim (approximately level). Avoid placing heavy weights high up.

Engine

Mount the engine and select the propeller in accordance with the guidelines of the engine manufacturer.

Type of engine	Outboard	
Number of engines	n	1
Maximum recommended engine(s) power	kW	200
Maximum recommended engine(s) mass	kg	278

WARNING!

It is prohibited to operate a vessel with an engine with a mass and power greater than **permissible**.

© 2026 Swoop · v2.0 · 08.2026 · Відтворення, розповсюдження або переробка без письмового дозволу заборонені / Reproduction, distribution or adaptation without written permission is prohibited

Schematic view of the boat 585 DC

Overall view

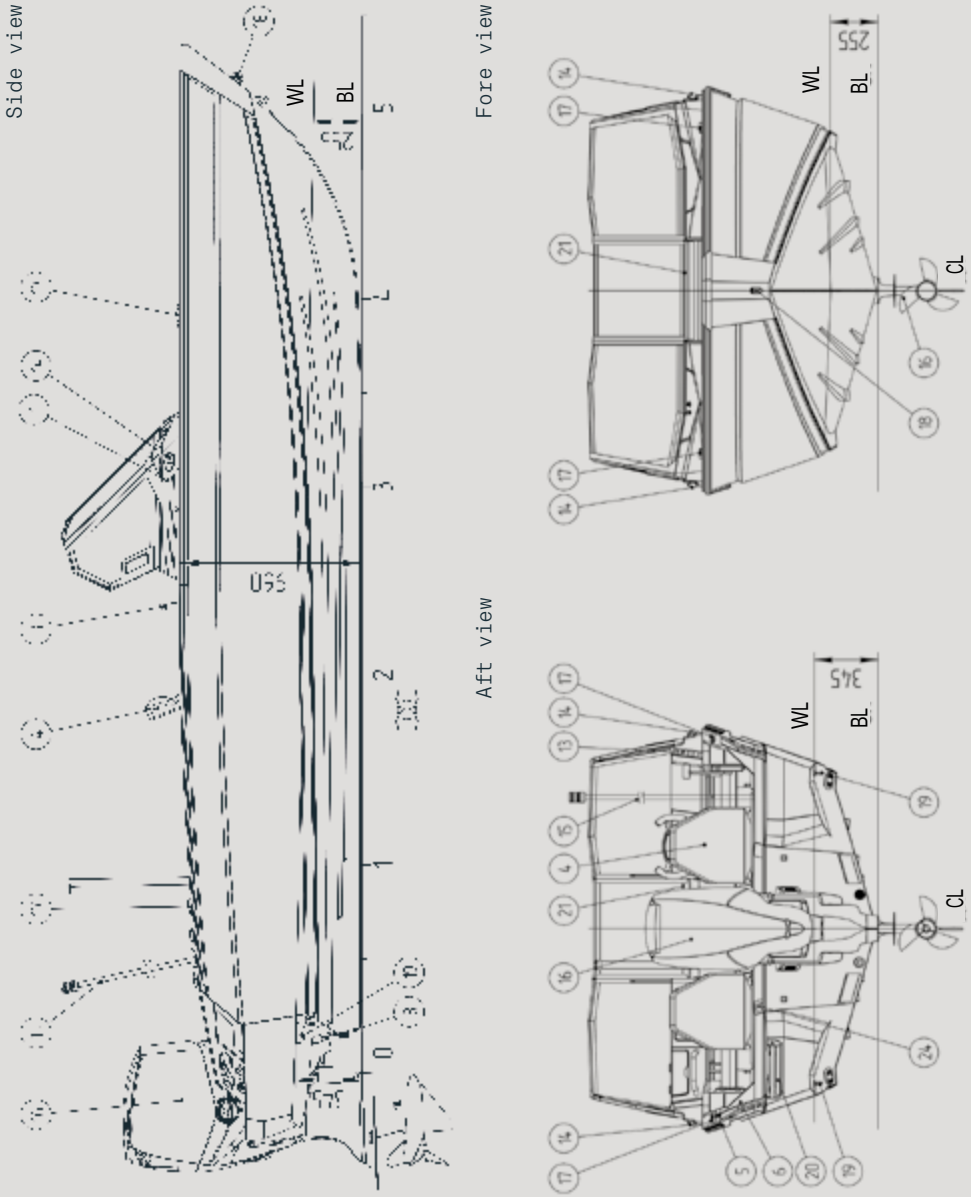

© 2026 Swoop · v2.0 · 08.2026 · Відтворення, розповсюдження або переробка без письмового дозволу заборонені / Reproduction, distribution or adaptation without written permission is prohibited

Top view

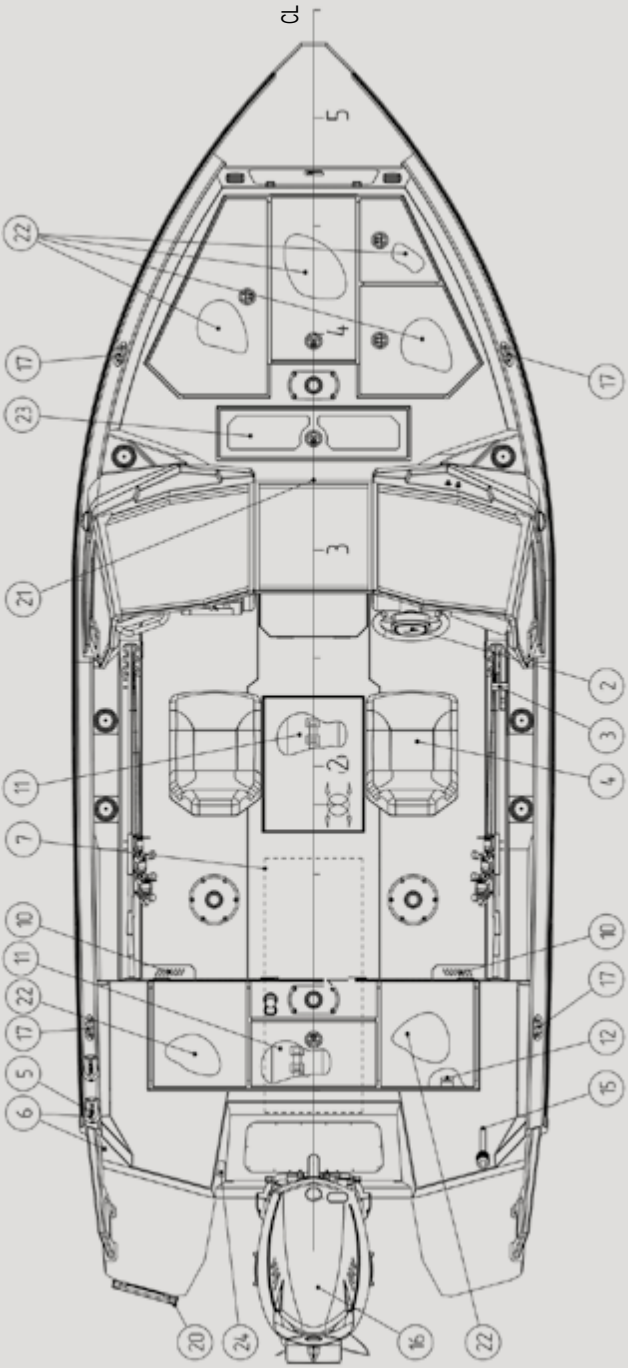

© 2026 Swoop · v2.0 · 08.2026 · Відтворення, розповсюдження або переробка без письмового дозволу заборонені / Reproduction, distribution or adaptation without written permission is prohibited

Schematic view of the boat 585 DC. Overall view

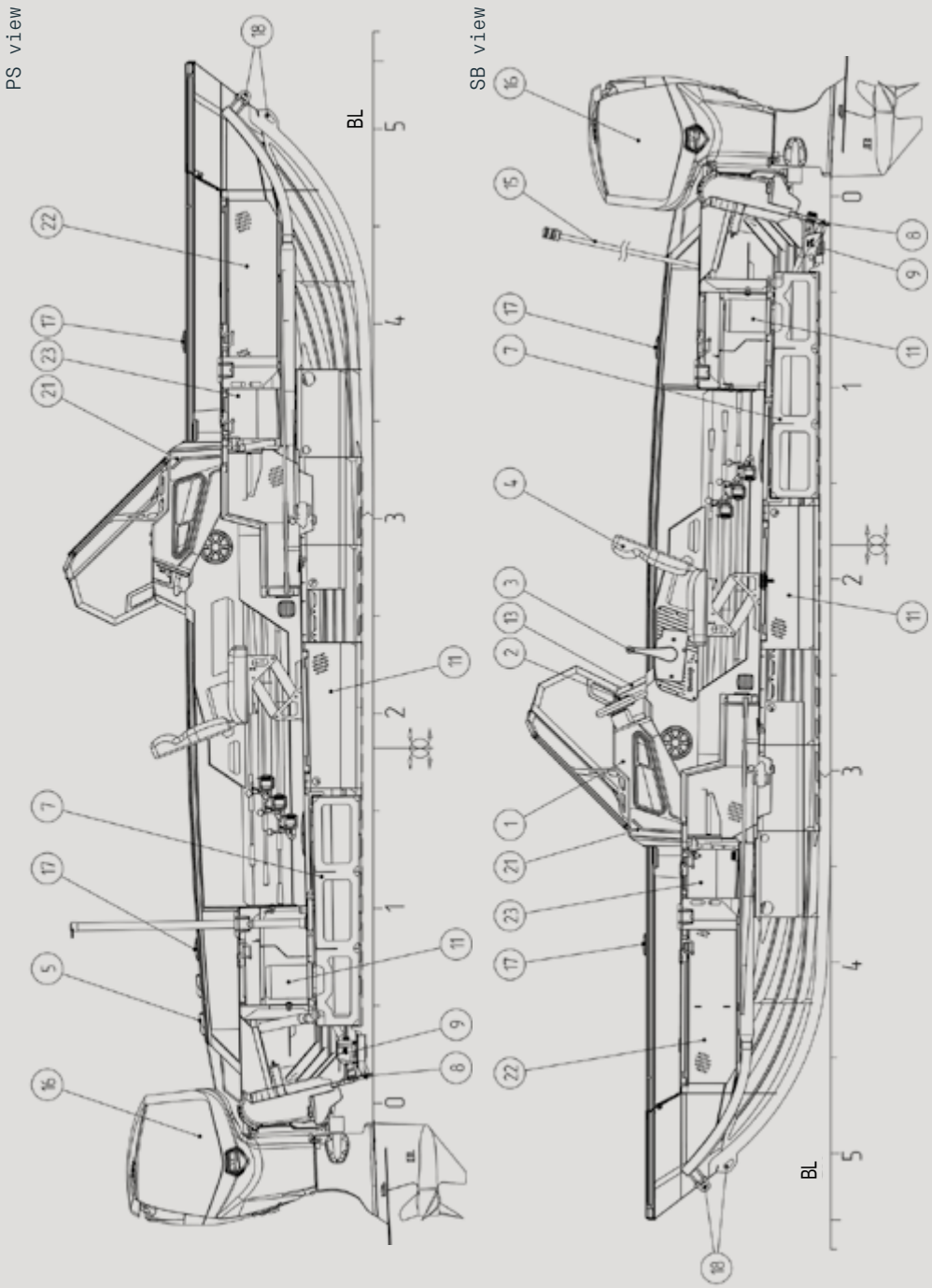

© 2026 Swoop · v2.0 · 08.2026 · Відтворення, розповсюдження або переробка без письмового дозволу заборонені / Reproduction, distribution or adaptation without written permission is prohibited

Legend

1. Console
2. Steering wheel
3. Remote control handle
4. Captain’s (operator’s) seat
5. Fuel tank filler neck
6. Fuel tank vent
7. Fuel tank
8. Drain plug
9. Bilge pump
10. Deck drainage system
11. Battery compartment
12. Main battery switch
13. Systems control panel
14. Navigation lights
15. All-round (anchor) light
16. Outboard engine
17. Mooring cleats
18. Bow eye
19. Stern eyes
20. Boarding ladder
21. Pass-Through Through the Console
22. Storage compartments
23. Livewell
24. Builder’s plate / CIN

WL - Waterline

BP - Base Plane

CL - Centerline Plane

© 2026 Swoop · v2.0 · 08.2026 · Відтворення, розповсюдження або переробка без письмового дозволу заборонені / Reproduction, distribution or adaptation without written permission is prohibited

Fuel System of the 585 DC Boat

Top view

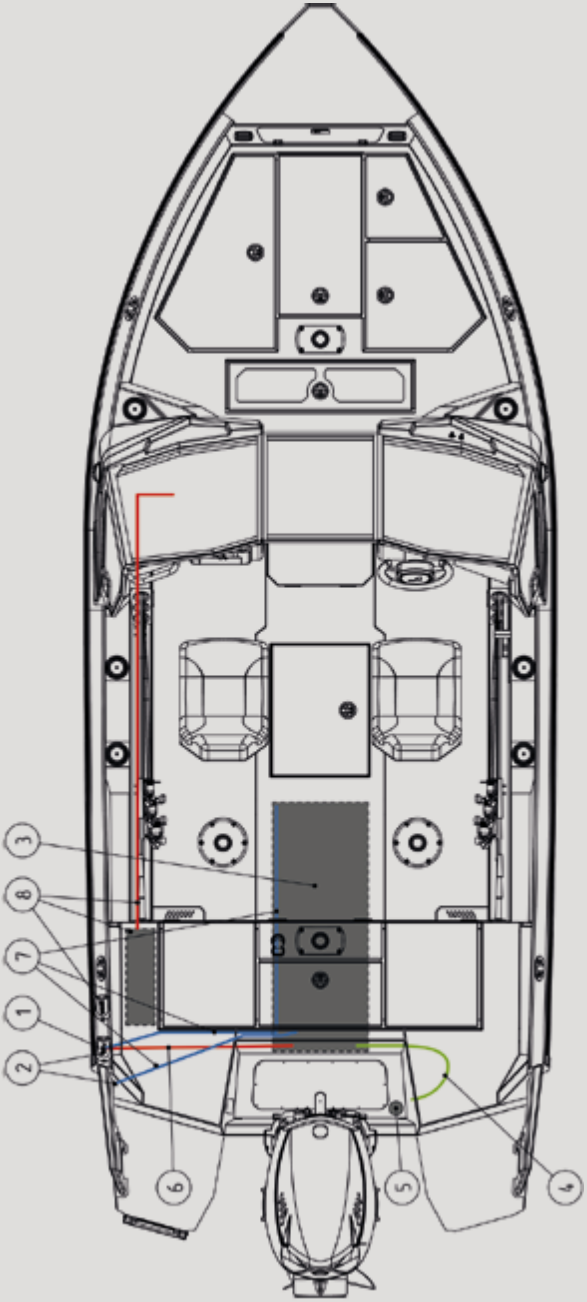

© 2026 Swoop · v2.0 · 08.2026 · Відтворення, розповсюдження або переробка без письмового дозволу заборонені / Reproduction, distribution or adaptation without written permission is prohibited

Side view

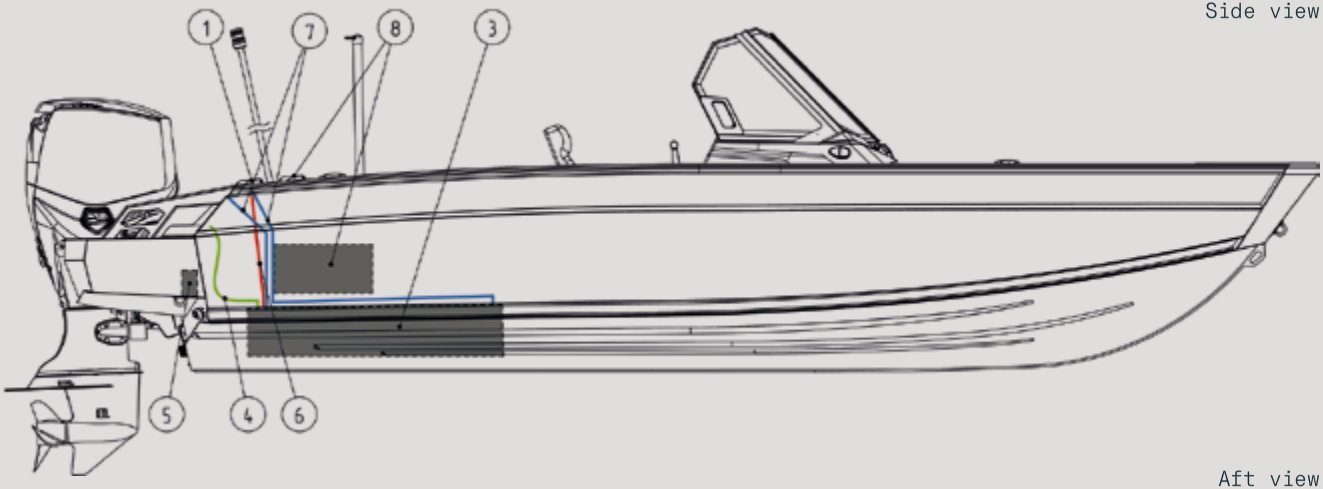

Aft view

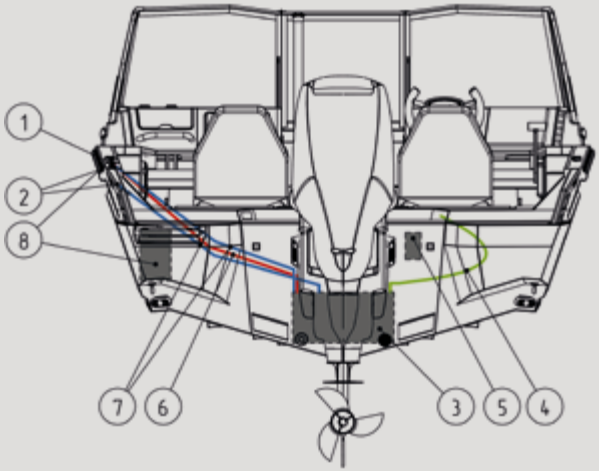

Legend

1	Fuel tank filler neck
2	Fuel tank vent
3	Fuel tank
4	Fuel outlet to engine
5	Fuel system air separator (if installed)
6	Fuel line
7	Vent line
8	Heater fuel tank and fuel lines

© 2026 Swoop · v2.0 · 08.2026 · Відтворення, розповсюдження або переробка без письмового дозволу заборонені / Reproduction, distribution or adaptation without written permission is prohibited

Drainage System of the 585 DC Boat

Side view

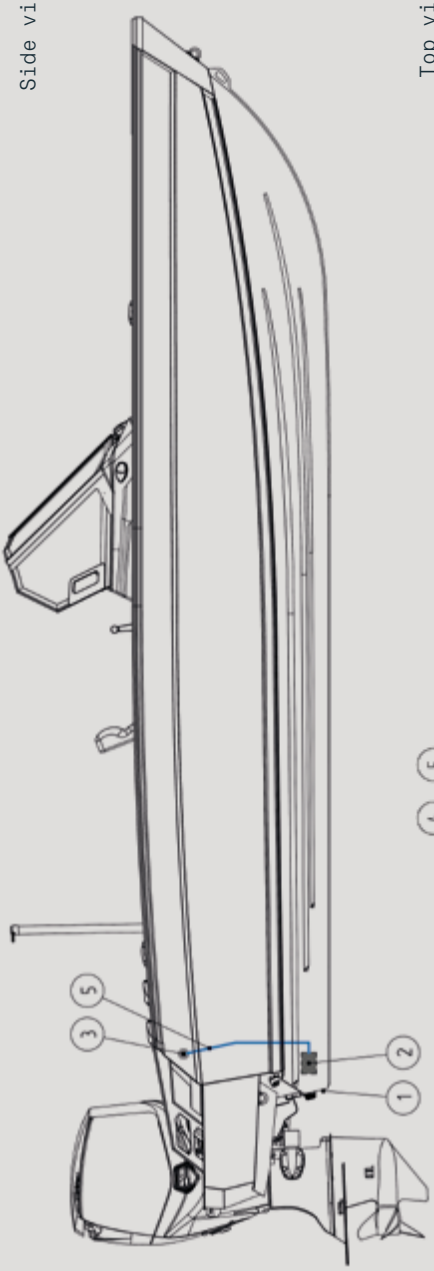

Top view

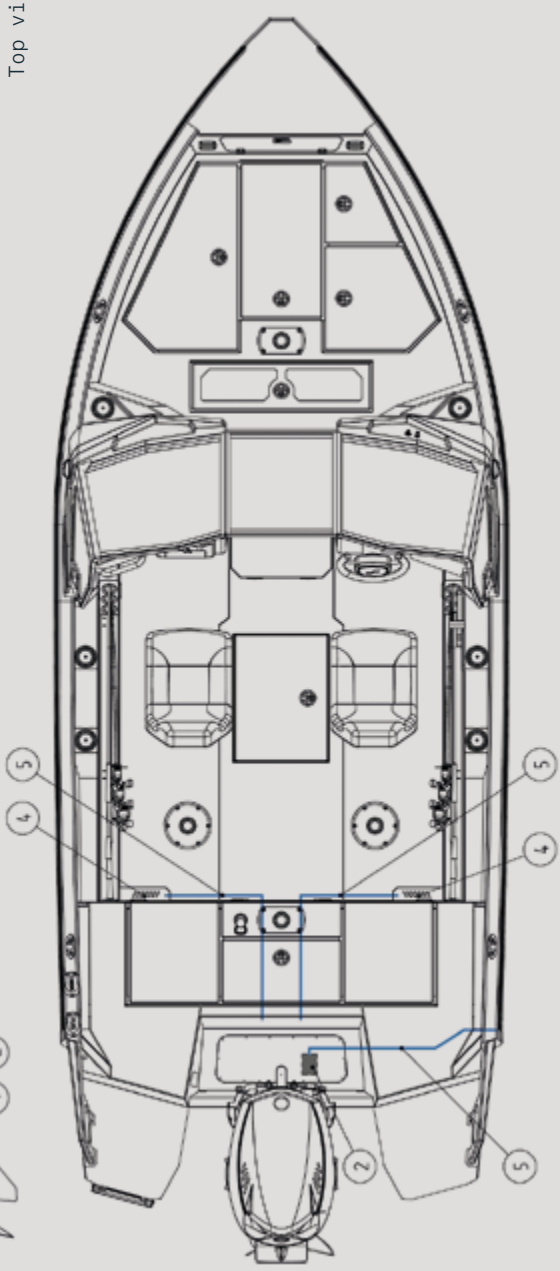

© 2026 Swoop · v2.0 · 08.2026 · Відтворення, розповсюдження або переробка без письмового дозволу заборонені / Reproduction, distribution or adaptation without written permission is prohibited

PS view

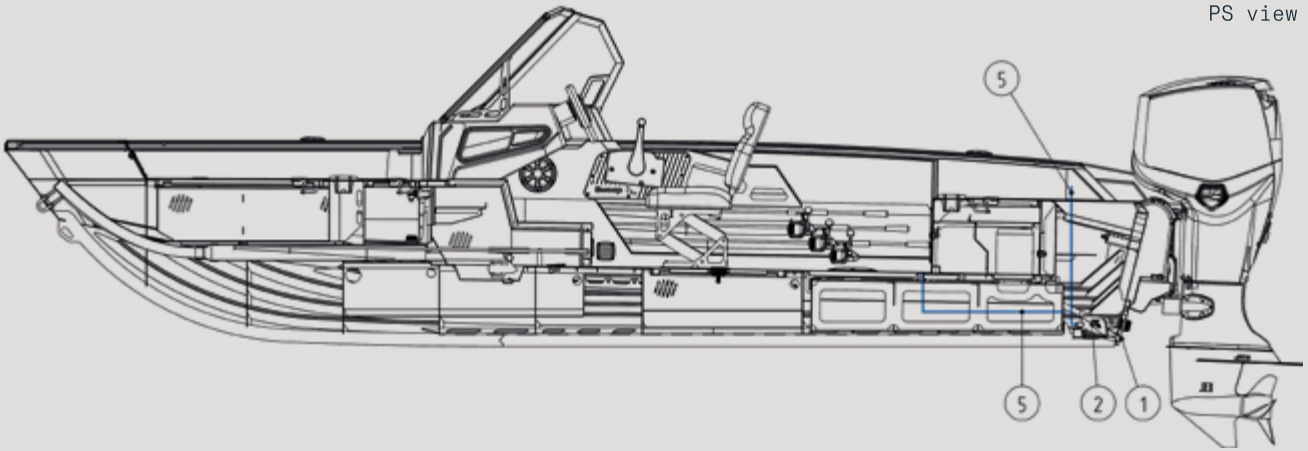

Aft view

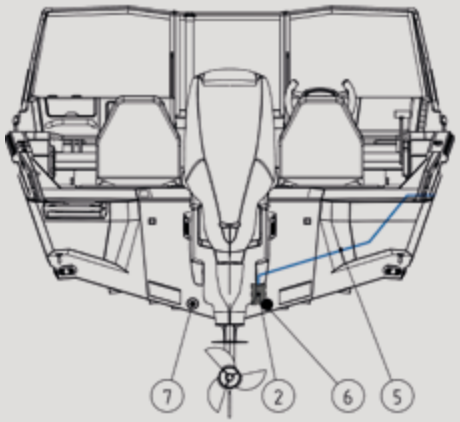

Legend

1	Drain plug
2	Bilge pump
3	Bilge pump discharge outlet
4	Deck / cockpit drain openings
5	Drainage line
6	Livewell intake
7	Livewell drain

© 2026 Swoop · v2.0 · 08.2026 · Відтворення, розповсюдження або переробка без письмового дозволу заборонені / Reproduction, distribution or adaptation without written permission is prohibited

Corrugated Cable Conduits for the 585 DC Boat

PS view

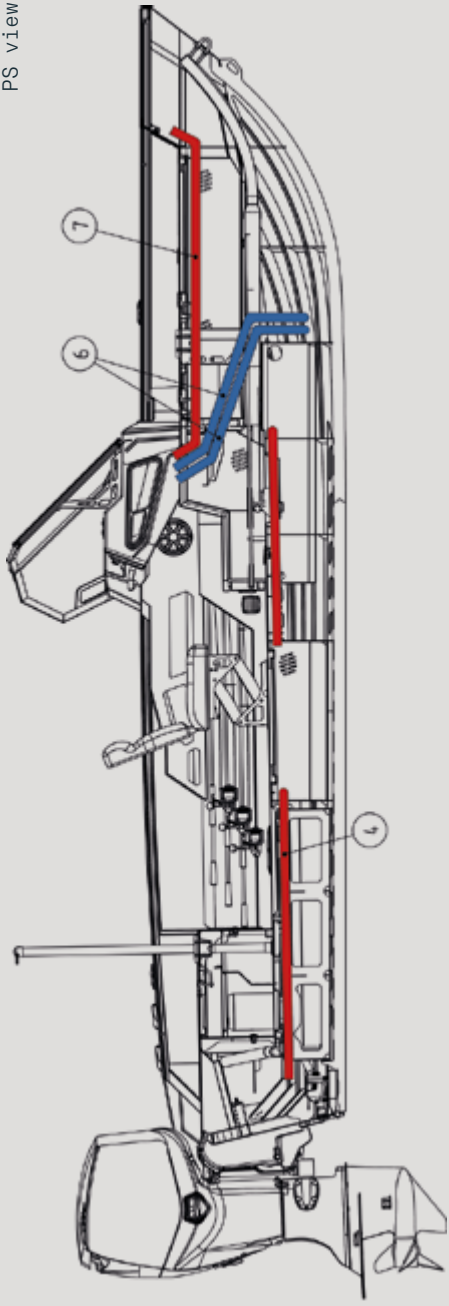

SB view

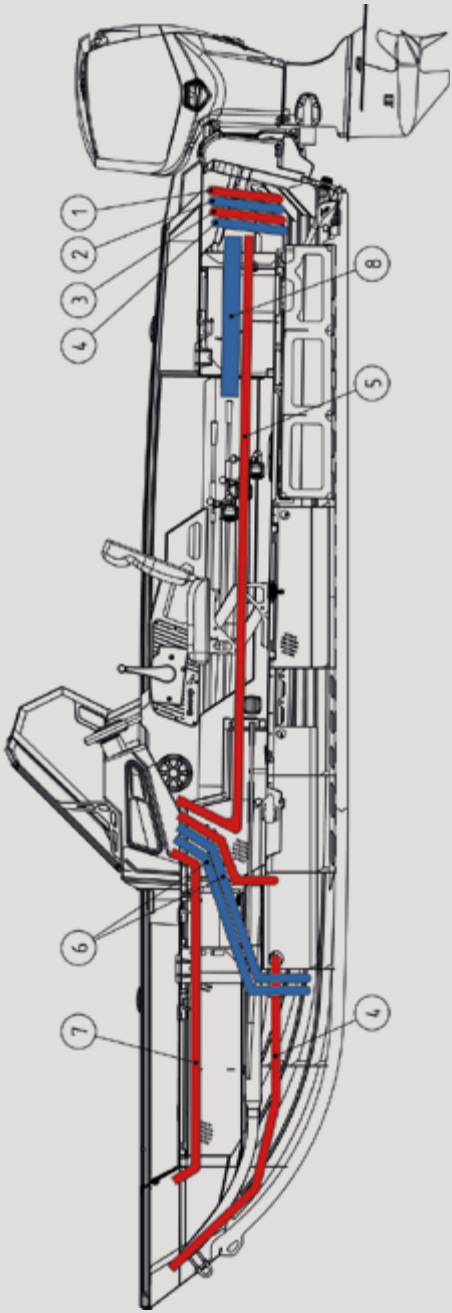

© 2026 Swoop · v2.0 · 08.2026 · Відтворення, розповсюдження або переробка без письмового дозволу заборонені / Reproduction, distribution or adaptation without written permission is prohibited

© 2026 Swoop · v2.0 · 08.2026 · Відтворення, розповсюдження або переробка без письмового дозволу заборонені / Reproduction, distribution or adaptation without written permission is prohibited

Top view

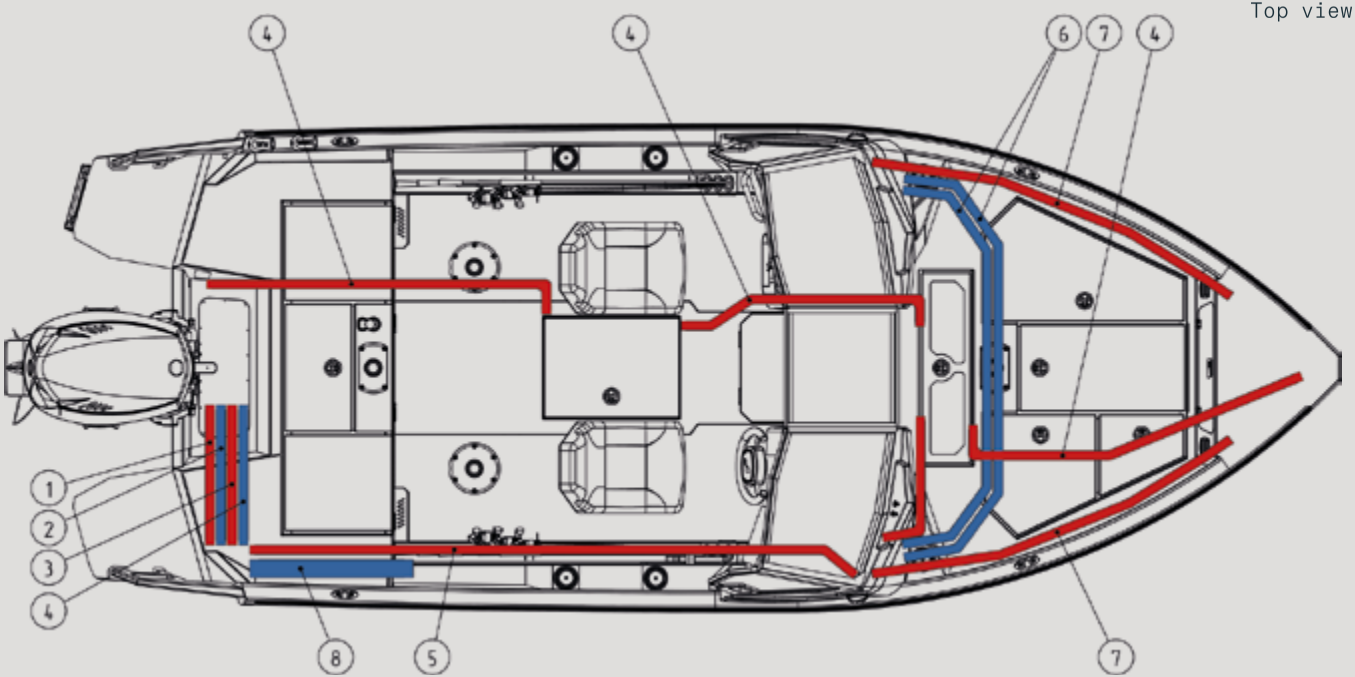

Legend

1	Bilge pump
2	Fuel supply
3	Battery switch and other systems
4	Battery power cables
5	Livewell pump and other systems
6	Inter-console conduits
7	Driver’s console and bow compartment
8	Main engine communication conduit

Swoop

Schematic view of the boat 585 DC Pro

Overall view

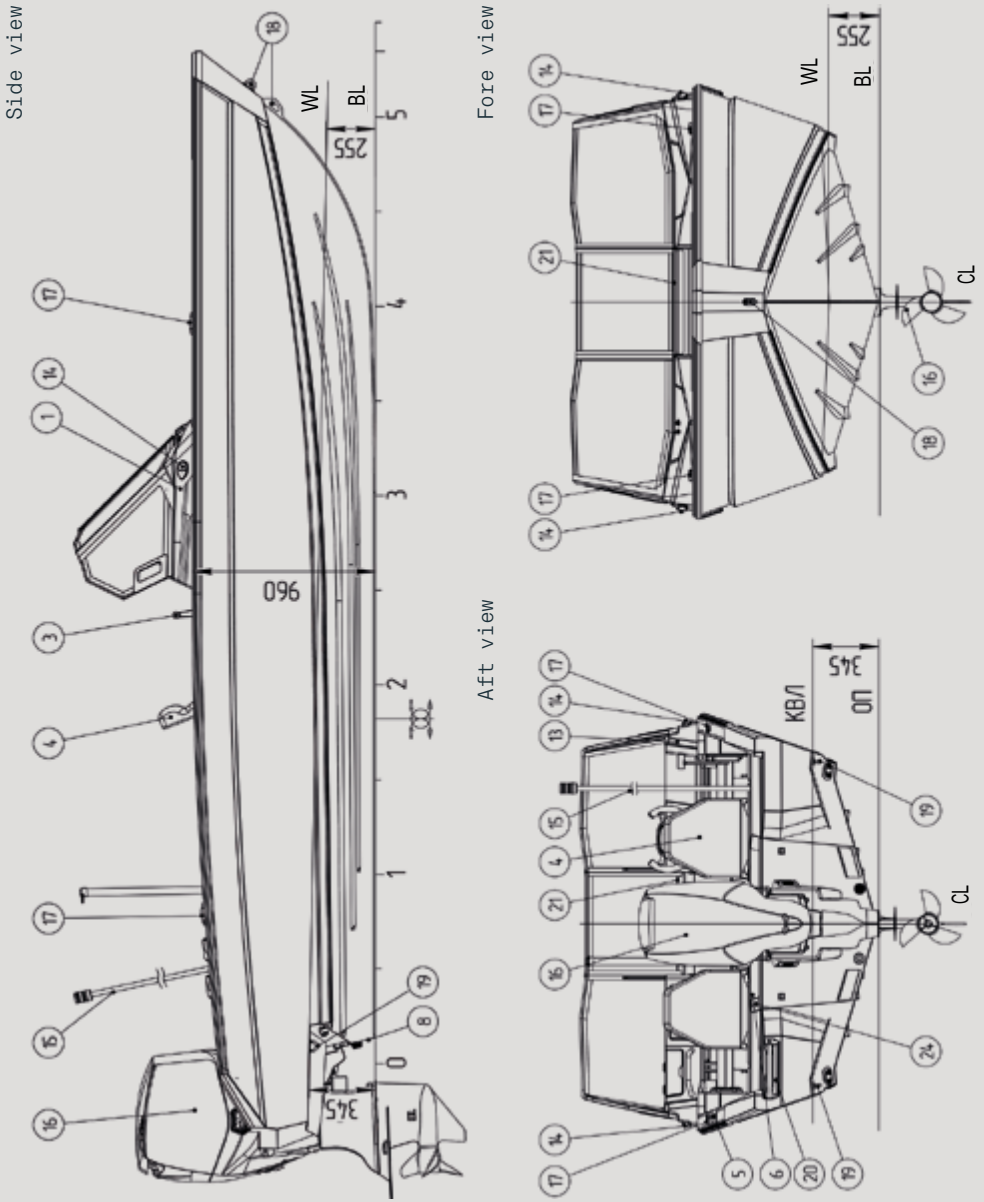

© 2026 Swoop · v2.0 · 08.2026 · Відтворення, розповсюдження або переробка без письмового дозволу заборонені / Reproduction, distribution or adaptation without written permission is prohibited

Top view

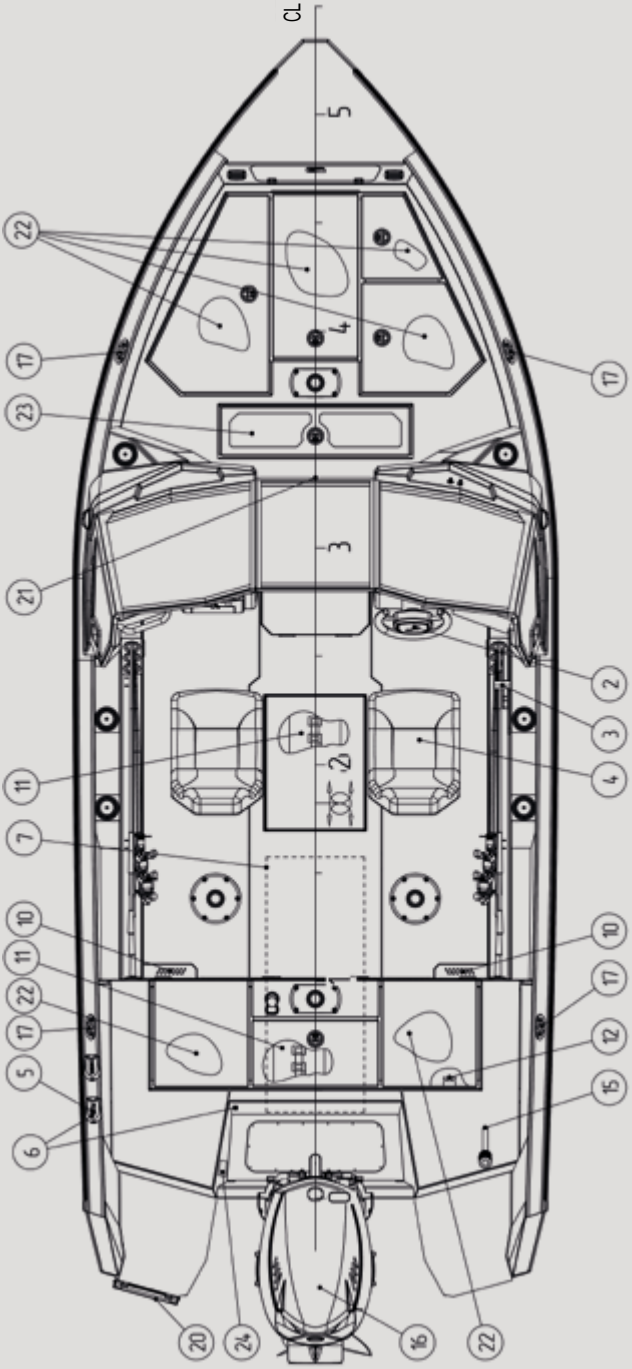

© 2026 Swoop · v2.0 · 08.2026 · Відтворення, розповсюдження або переробка без письмового дозволу заборонені / Reproduction, distribution or adaptation without written permission is prohibited

Schematic view of the boat 585 DC Pro. Overall view

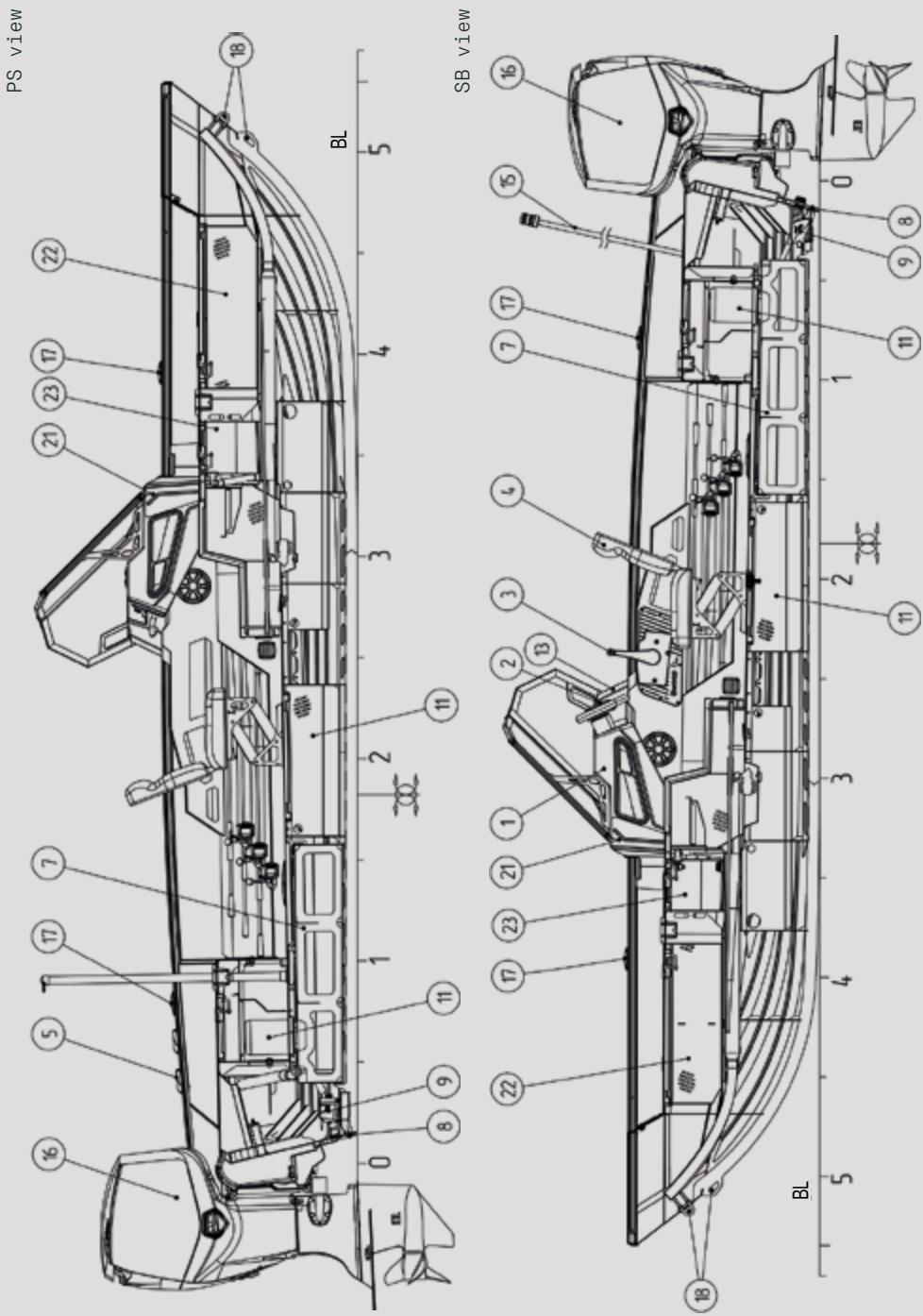

© 2026 Swoop · v2.0 · 08.2026 · Відтворення, розповсюдження або переробка без письмового дозволу заборонені / Reproduction, distribution or adaptation without written permission is prohibited

Legend

1. Console
2. Steering wheel
3. Remote control handle
4. Captain’s (operator’s) seat
5. Fuel tank filler neck
6. Fuel tank vent
7. Fuel tank
8. Drain plug
9. Bilge pump
10. Deck drainage system
11. Battery compartment
12. Main battery switch
13. Systems control panel
14. Navigation lights
15. All-round (anchor) light
16. Outboard engine
17. Mooring cleats
18. Bow eye
19. Stern eyes
20. Boarding ladder
21. Pass-Through Through the Console
22. Storage compartments
23. Livewell
24. Builder’s plate / CIN

WL - Waterline

BP - Base Plane

CL - Centerline Plane

© 2026 Swoop · v2.0 · 08.2026 Відтворення, розповсюдження або переробка без письмового дозволу заборонені / Reproduction, distribution or adaptation without written permission is prohibited

Fuel System of the 585 DC Pro Boat

Top view

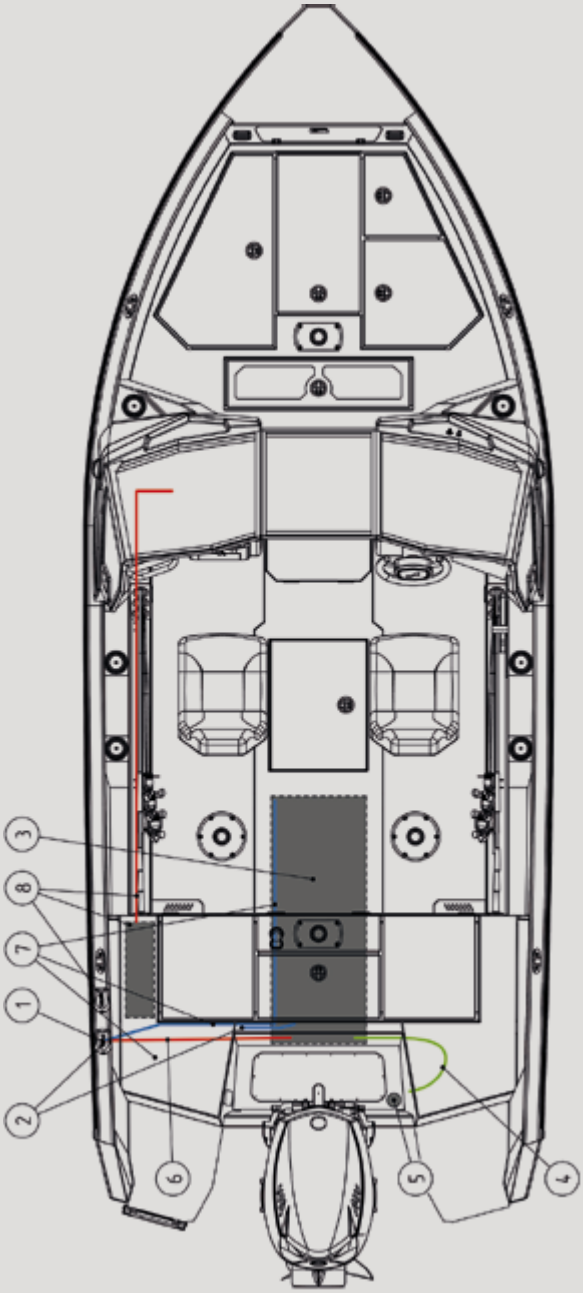

© 2026 Swoop · v2.0 · 08.2026 · Відтворення, розповсюдження або переробка без письмового дозволу заборонені / Reproduction, distribution or adaptation without written permission is prohibited

Side view

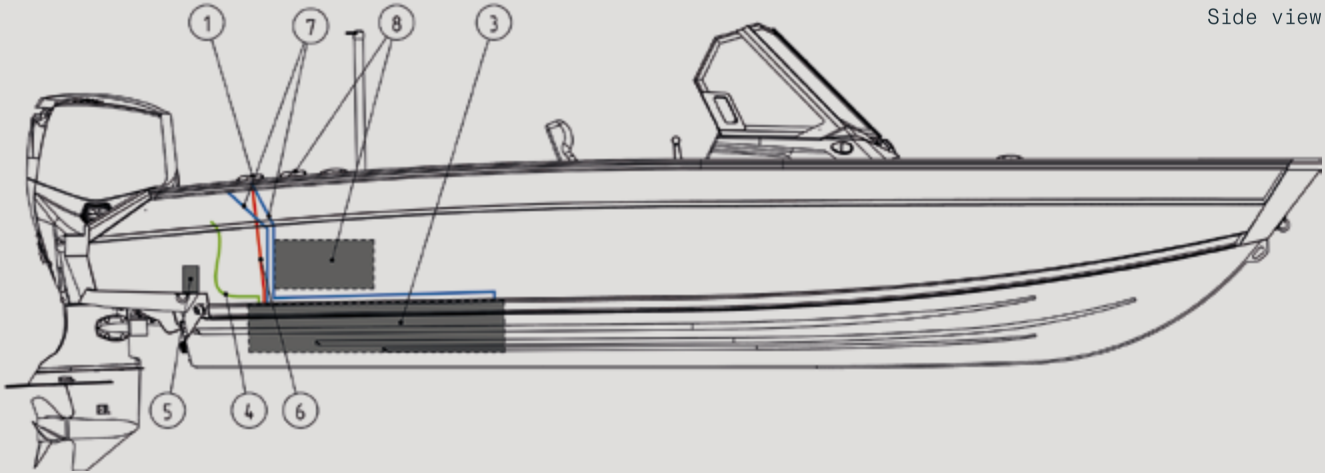

Aft view

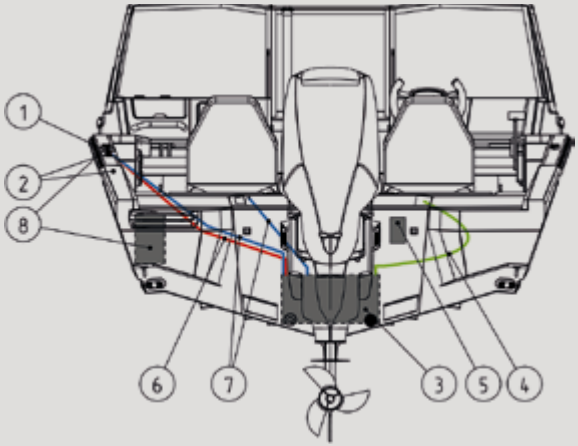

Legend

1	Fuel tank filler neck
2	Fuel tank vent
3	Fuel tank
4	Fuel outlet to engine
5	Fuel system air separator (if installed)
6	Fuel line
7	Vent line
8	Heater fuel tank and fuel lines

© 2026 Swoop · v2.0 · 08.2026 · Відтворення, розповсюдження або переробка без письмового дозволу заборонені / Reproduction, distribution or adaptation without written permission is prohibited

Drainage System of the 585 DC Pro Boat

Side view

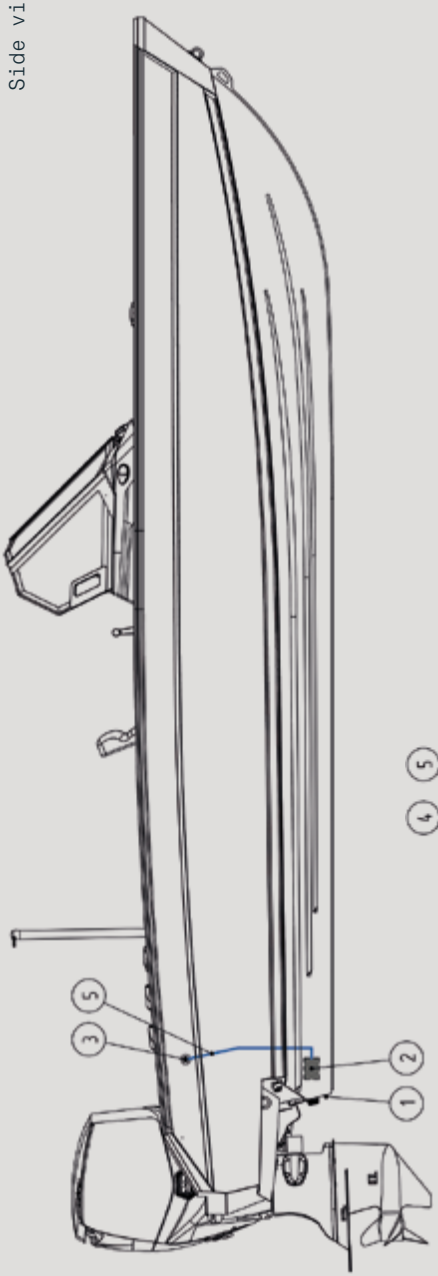

Top view

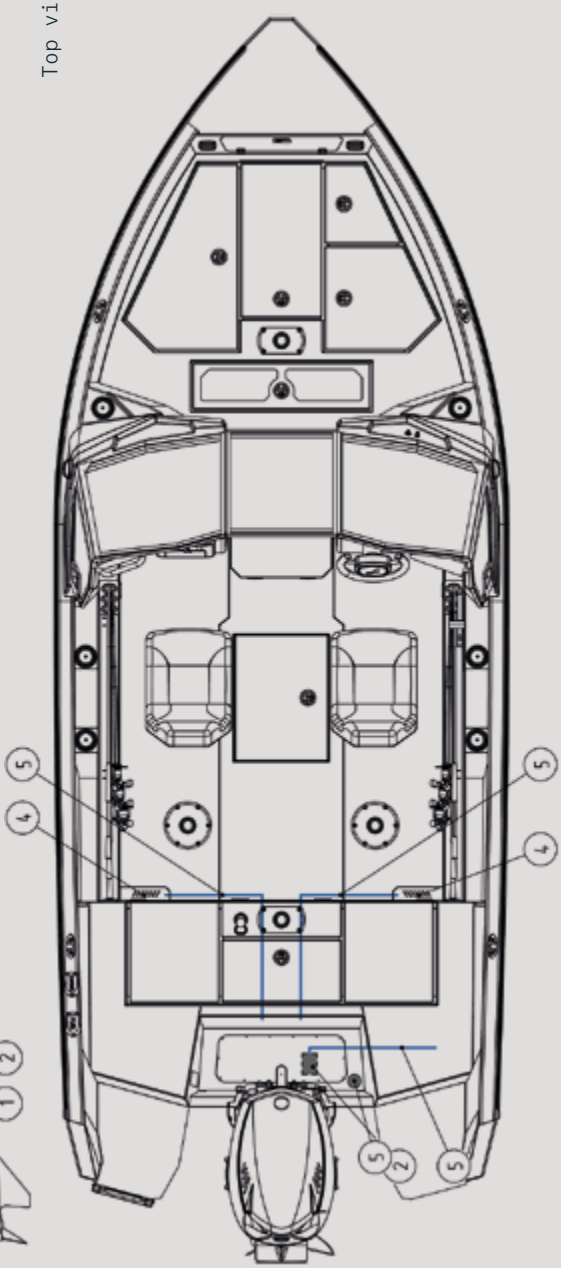

© 2026 Swoop · v2.0 · 08.2026 · Відтворення, розповсюдження або переробка без письмового дозволу заборонені / Reproduction, distribution or adaptation without written permission is prohibited

PS view

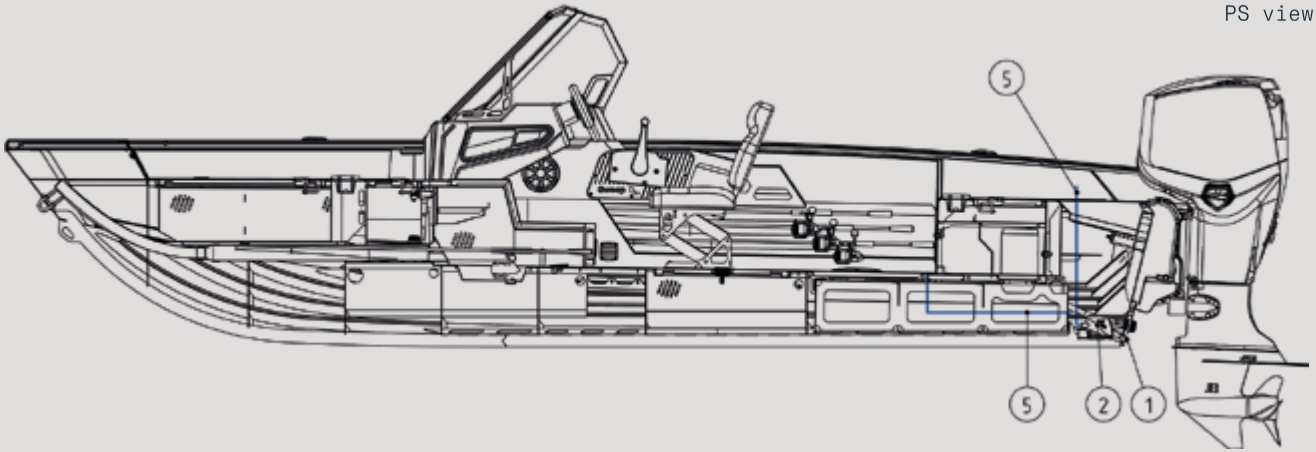

Aft view

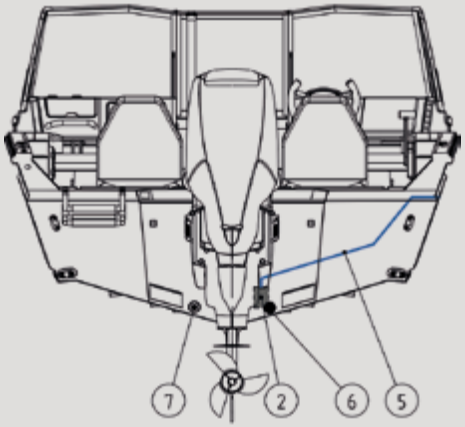

Legend

1. Drain plug
2. Bilge pump
3. Bilge pump discharge outlet
4. Deck / cockpit drain openings
5. Drainage line
6. Livewell intake
7. Livewell drain

© 2026 Swoop · v2.0 · 08.2026 · Відтворення, розповсюдження або переробка без письмового дозволу заборонені / Reproduction, distribution or adaptation without written permission is prohibited

Corrugated Cable Conduits for the 585 DC Pro Boat

PS view

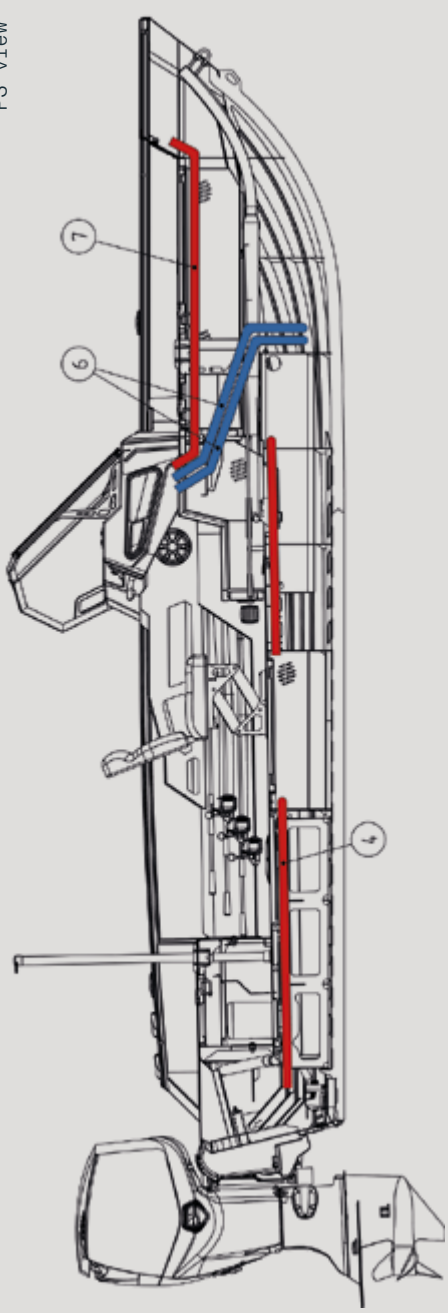

SB view

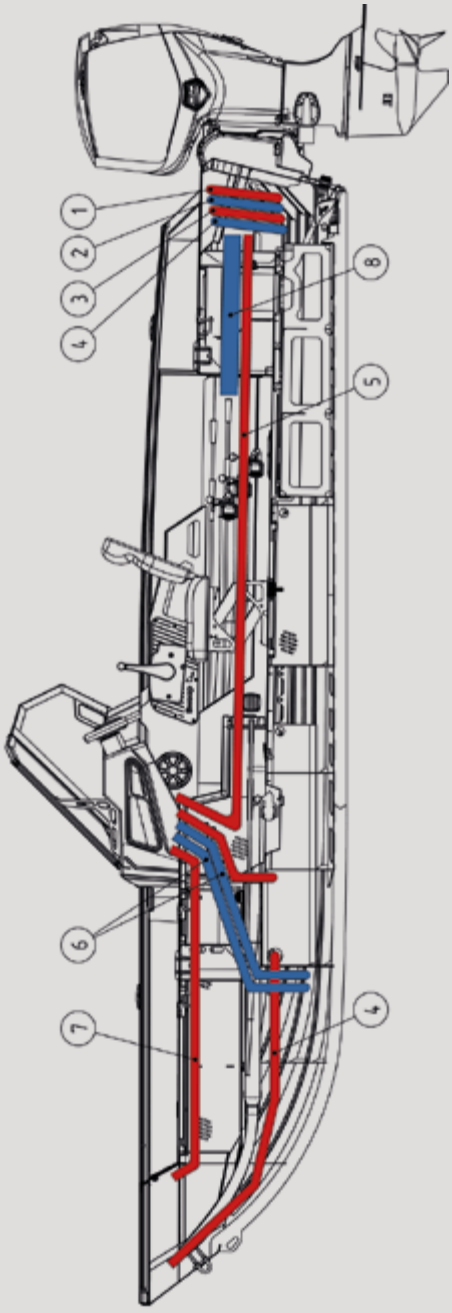

© 2026 Swoop · v2.0 · 08.2026 · Відтворення, розповсюдження або переробка без письмового дозволу заборонені / Reproduction, distribution or adaptation without written permission is prohibited

© 2026 Swoop · v2.0 · 08.2026 · Відтворення, розповсюдження або переробка без письмового дозволу заборонені / Reproduction, distribution or adaptation without written permission is prohibited

Top view

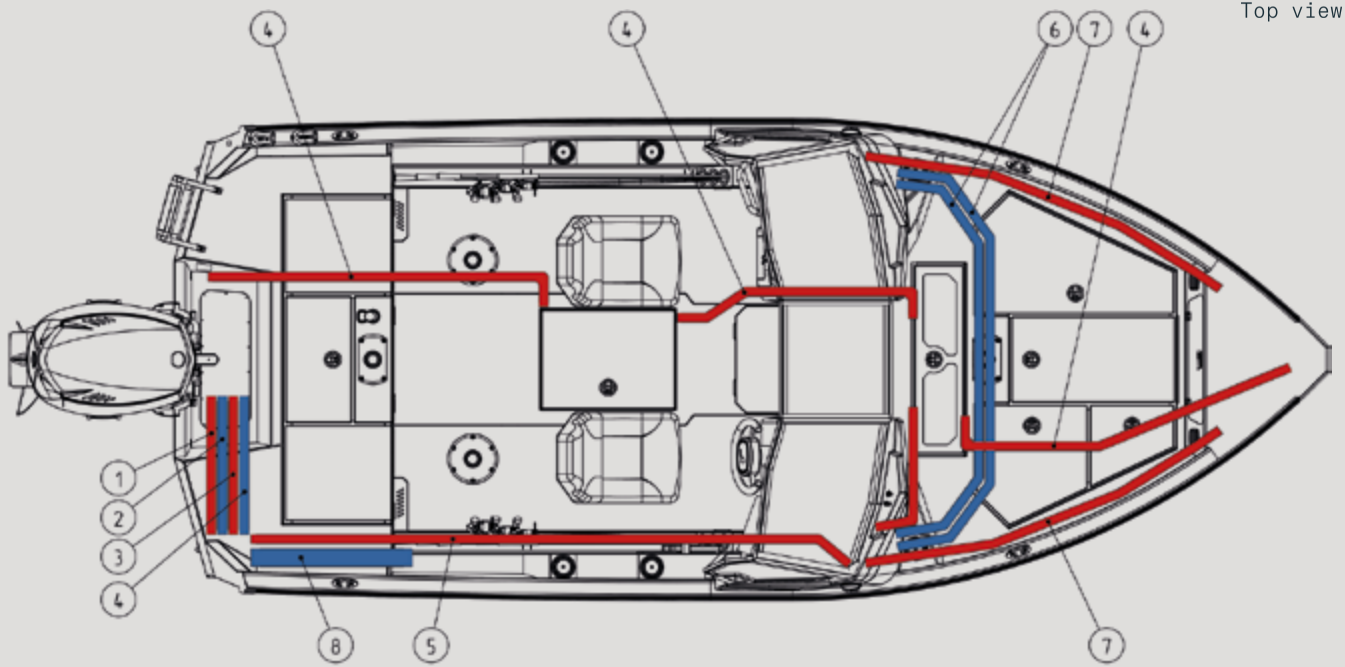

Legend

1	Bilge pump
2	Fuel supply
3	Battery switch and other systems
4	Battery power cables
5	Livewell pump and other systems
6	Inter-console conduits
7	Driver’s console and bow compartment
8	Main engine communication conduit

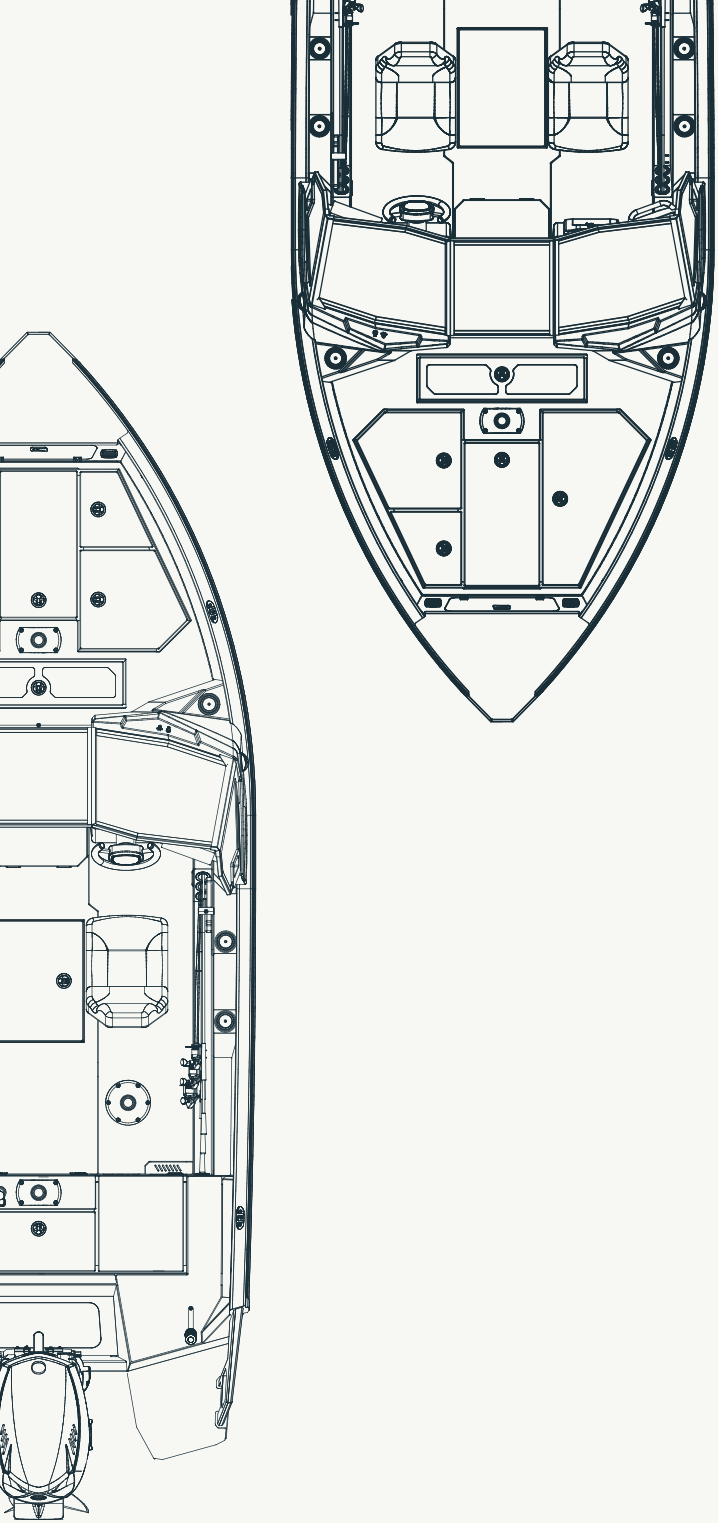

© 2026 Swoop · v2.0 · 08.2026 · Відтворення, розповсюдження або переробка без письмового дозволу заборонені / Reproduction, distribution or adaptation without written permission is prohibited

Stability and risk of flooding

Openings in the hull

The location of openings in the hull are indicated in the Schematic view of the boat. The boat is equipped with a draining plug at the lower end of transom.

Draining the boat on land is done by opening the plug.



NOTICE

Remember to fasten the draining plug before launching the boat.

Keep the drain holes clean and unobstructed.

Bilge pumps and bailing

The boat is equipped with an automatic electric bilge pump.

When the sensor detects the presence of water in the bilge, the pump drains it automatically. The pump is always in standby mode, regardless of the position of the main switch, provided that the battery is installed and connected.

The electric bilge pump can also be operated from the switch panel.

The capacity of the bilge pump is about 52 litres/min.



WARNING

The bilge pumping system is not intended to drain the craft in the case of damage.



NOTICE

Check the function of all bilge pumps at regular intervals.

Clear pump inlets from debris.

It is the responsibility of the owner/operator to have at least one bucket/bailer onboard, secured against accidental loss.

.

© 2026 Swoop · v2.0 · 08.2026 · Відтворення, розповсюдження або переробка без письмового дозволу заборонені / Reproduction, distribution or adaptation without written permission is prohibited

Stability and buoyancy

The boat meets all of its stability requirements, but the following should be taken into account:



CAUTION

Any change in the disposition of the masses aboard may significantly affect the stability, trim and performance of your craft.

Bilge water should be kept to a minimum.

Stability is reduced by any weight added above the main deck.

In rough weather, hatches and lockers should be closed to minimize the risk of flooding.

Stability may be reduced when towing or lifting heavy

weights using a davit or boom.

Breaking waves are a serious stability hazard.

© 2026 Swoop · v2.0 · 08.2026 · Відтворення, розповсюдження або переробка без письмового дозволу заборонені / Reproduction, distribution or adaptation without written permission is prohibited

Risk of fire or explosion

Refueling



DANGER

Never smoke while working on fuel system!

During refueling, do not use switches or electrical devices that may cause a spark. Therefore, **always keep the main battery disconnect switch in the "OFF" position.**

After refueling, there is always a risk of explosion due to existing vapours.

Check annually that the fuel hoses are not worn.

Fire protection

The boat should be equipped with a two portable fire extinguishers class 5A/34 B. The fire extinguishers must be serviced annually by an authorized inspector. In the event that the fire extinguisher is replaced the capacity of the new one should be the equivalent of the old one.

Ensure that fire-fighting equipment is readily accessible. Inform members of the crew about the location and operation of fire-fighting equipment.



CAUTION

Never block passages to exits and hatches.

Never hinder access to safety equipment, for instance the switches to the electric system.

Never hinder access to fire extinguishers located in a box.

Never make changes to any of the boat's systems (especially the electricity or the fuel systems) or allow an unqualified person to make changes to any of the boat's systems.

Ensure that ventilation ducts are free from obstruction.

Keep fixed ventilation openings unobstructed at all times.

© 2026 Swoop · v2.0 · 08.2026 · Відтворення, розповсюдження або переробка без письмового дозволу заборонені / Reproduction, distribution or adaptation without written permission is prohibited

Electrical system

Cut the power when carrying out any electrical installations.

When you remove or install batteries, do not touch both poles simultaneously with metallic items. Do not touch the positive pole and metallic boat hull simultaneously. Do not alter the rated amps of overcurrent protective devices.

Charge the batteries only with the charger supplied or with another, with similar capacity. Over-charging may cause an explosion.

If you leave the craft for a longer time, disconnect the power with the main switch. Never leave the craft unattended with the electrical system energized, except automatic bilge pump, fire protection and alarm circuits.



WARNING

The fire or explosion hazards may result from improper use of electrical system.

The electric-shock hazards may result from improper use of electrical system.

Do not work on an energized electrical system.



NOTICE

Do not modify the craft's electrical systems. Installation, alterations and maintenance should be carried out by a skilled marine electrical technician.

© 2026 Swoop · v2.0 · 08.2026 · Відтворення, розповсюдження або переробка без письмового дозволу заборонені / Reproduction, distribution or adaptation without written permission is prohibited

Equipment Layout

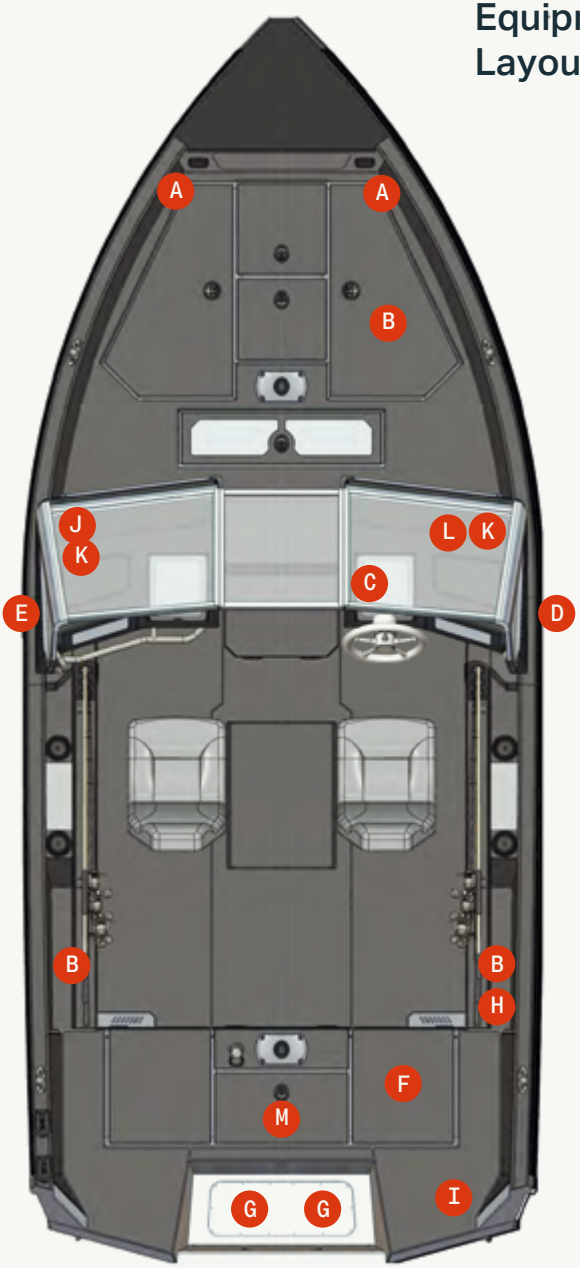

A- Side LED lighting

B- Locker LED lighting

C- Fuse block

D- Green navigation light, starboard side

E- Red navigation light, port side

F- Livewell pump

G- Bilge pump

H- Main battery switch

I- Foldable white all-round navigation light

J- 12V socket / cigarette lighter socket

K- USB Type-C charging socket

L- Horn

M- Fuel level sensor

© 2026 Swoop · v2.0 · 08.2026 · Відтворення, розповсюдження або переробка без письмового дозволу заборонені / Reproduction, distribution or adaptation without written permission is prohibited

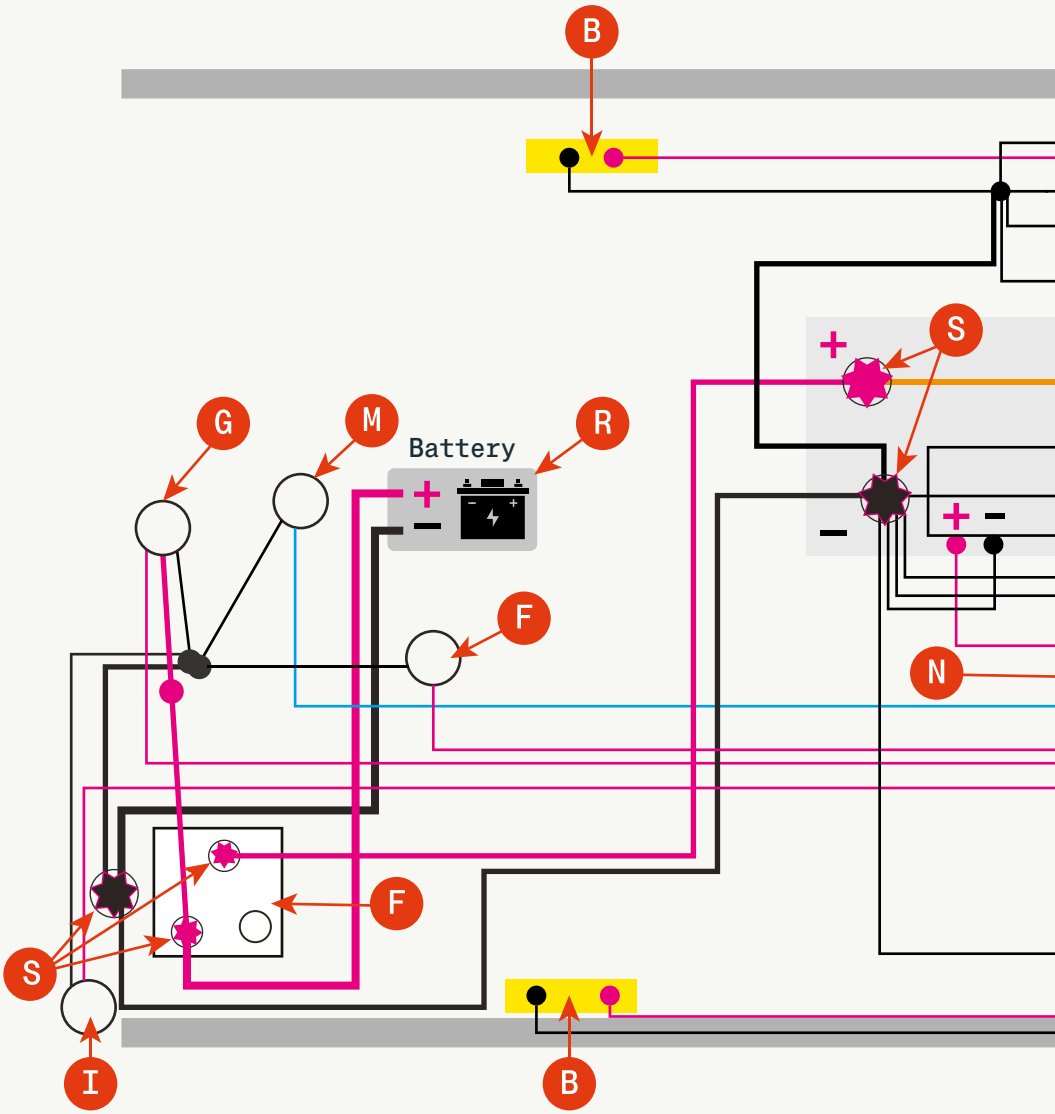

A- Side LED lighting

B- Locker LED lighting

C- Fuse block

D- Green navigation light, starboard side

E- Red navigation light, port side

F- Livewell pump

G- Bilge pump

H- Main battery switch

I- Foldable white all-round navigation light

© 2026 Swoop · v2.0 · 08.2026 · Відтворення, розповсюдження або переробка без письмового дозволу заборонені / Reproduction, distribution or adaptation without written permission is prohibited

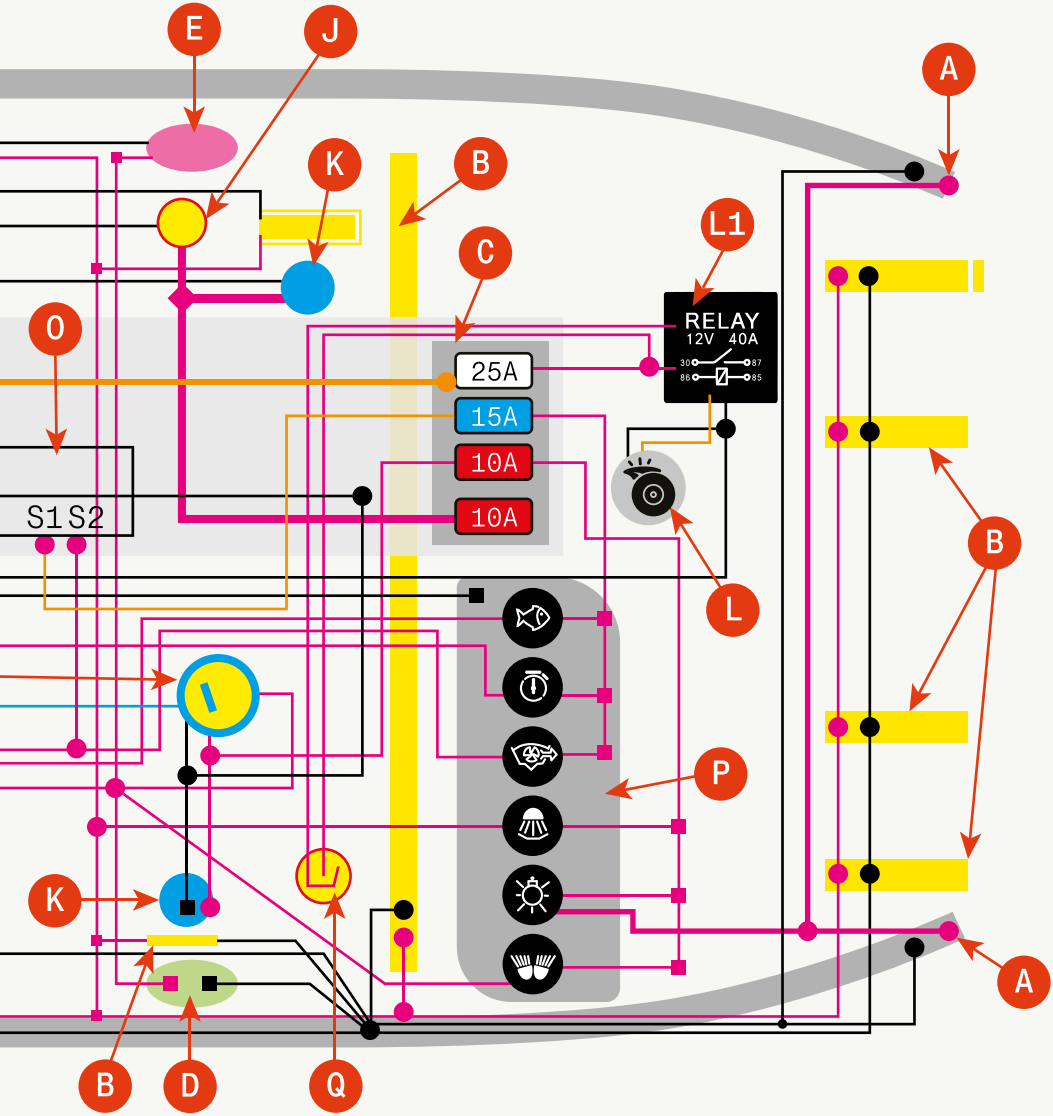

J- 12V socket / cigarette lighter socket
K- USB Type-C charging socket
L- Horn
L1- Horn relay
M- Fuel level sensor
N- Fuel level indicator
O- Livewell pump timer relay
P- Vessel systems control panel
Q- Horn button
R- Battery
S- Power cable bolted connection points

© 2026 Swoop · v2.0 · 08.2026 · Відтворення, розповсюдження або переробка без письмового дозволу заборонені / Reproduction, distribution or adaptation without written permission is prohibited

Operation

If this is your first boat or a boat type new to you, take someone with experience from a similar boat with you the first few times.

Controls

The remote control combines the functions of throttle, forward and reverse gears, and the adjusting of the engine trim angle.

Starting the engine

01 Switch on the engine using the main switch.

02 Lower the engine to the driving position by pressing the Power Trim button on the gear/throttle handle.

03 Check that the gear/throttle handle is in the neutral position and that the emergency switch is attached to the bottom of the remote control.

04 Switch on the current, using the start key, without starting the engine and wait a few seconds until the warning lights light up.

05 Start the engine by turning the ignition key clockwise, until it starts.

06 After the engine has started, let it idle for a few minutes before setting off.

For more detailed information, please refer to the engine manual.

© 2026 Swoop · v2.0 · 08.2026 · Відтворення, розповсюдження або переробка без письмового дозволу заборонені / Reproduction, distribution or adaptation without written permission is prohibited

Driving

Always adjust your speed to the conditions and the environment.

Take into account the following:

- waves (also consult the passengers about a comfortable speed);
- visibility (islands, fog, rain, driving against the sun);
- familiarity with the route (sufficient time for navigation);
- the width of the route (other traffic, noise and wash on shore);
- make sure, that there is always sufficient distance to avoid collision.

When running at low speed, a planing boat's directional stability is poorer than at higher speed. So be careful in narrow passages and when meeting other boats.

The running position of the boat greatly affects its driving characteristics and fuel consumption.

The boat's best operational position may be achieved by:

- pacing the load properly;
- adjusting the engine's trim angle.

The combination of the right operational position with the right speed makes driving in open waters more comfortable and safer.



NOTICE

Do not operate the craft with an engine of rated power greater than the maximum recommended power.

Avoid sudden maneuvres at speed. High speed and quick maneuvering can lead to large heeling angles and loss of control over the boat

For comfort and safety, reduce speed in high or rough seas.

Always use the engine cut off lanyard if provided.

© 2026 Swoop · v2.0 · 08.2026 · Відтворення, розповсюдження або переробка без письмового дозволу заборонені / Reproduction, distribution or adaptation without written permission is prohibited

Visibility from helm station

Operating the boat is straightforward in good weather and calm water. Do not, however, forget the importance of keeping an adequate lookout.

In order for the visibility from the driver's seat to be as good as possible you should:

- ensure that passengers do not restrict your visibility;
- do not drive near planing speed for long periods, as the bow up comes up and reduces visibility;
- adjust the trim angle using trim tabs and/or power-trim so that the raising of the bow does not obstruct visibility;
- when visibility is poor, look over the windshield;
- remember to also keep a lookout behind you, particularly in shipping lanes and heavily trafficked routes.

© 2026 Swoop · v2.0 · 08.2026 · Відтворення, розповсюдження або переробка без письмового дозволу заборонені / Reproduction, distribution or adaptation without written permission is prohibited

Other recommendations and guidelines

Man-overboard prevention and recovery

It is always a serious situation when someone falls overboard. Rescue procedures should be practiced in advance when the weather is good, because when someone has fallen overboard, there is no time for practicing.

In calm water, the easiest way of re-boarding is to use the swim ladder mounted onto the transom. The ladder can also be pulled down by a person who is in water.

If a child has fallen overboard, an adult with a life-saving device or a fender must always jump in after the child, however, someone must always remain onboard the boat.

It is very important to maintain visual and verbal contact in the event that a person falls overboard.



DANGER

A rotating propeller presents a life-threatening danger to a swimmer or a person that has fallen overboard. Use an emergency switch to turn off the engine when a swimmer or water skier is about to re-enter the boat from the water.

Securing loose equipment

Secure all loose equipment safely when underway.

© 2026 Swoop · v2.0 · 08.2026 · Відтворення, розповсюдження або переробка без письмового дозволу заборонені / Reproduction, distribution or adaptation without written permission is prohibited

Environment and nature considerations

Prevent fuel and/or oil leakage

A little bit of spilled oil or fuel is enough to contaminate an enormous amount of water. Therefore, handle carefully with these substances when refueling.

Wipe off spilled oil or fuel with some paper or cloth and throw it in a bun for chemical waste.

Do not drain oil, bilge water and other waste in the surface water. Drop off at authorized delivery points.



NOTICE

Immediately stop pumping from the bilge as soon as you notice that oil or other pollutants are present in the bilge and if there is a chance that these substances may get overboard.

Chemical and household waste

Keep the water quality as good as it is: no chemicals and do not throw waste overboard. **Use containers and waste bins.** Deliver the waste separately.

You should avoid:

- fuel and oil leakages;
- emptying garbage and waste into the water or on the shore;
- letting detergents or solvents get into the water;
- loud noise both on the water and at the marina;
- producing unnecessarily high wash in narrow passages and shallow waters.

Please also consider other local environmental legislation and regulations. Please make sure to familiarize yourself with the international regulations on the prevention of pollution at sea (**MARPOL**) and respect these to the greatest possible extent.

© 2026 Swoop · v2.0 · 08.2026 · Відтворення, розповсюдження або переробка без письмового дозволу заборонені / Reproduction, distribution or adaptation without written permission is prohibited

Anchoring, mooring and towing

Anchoring and mooring

lways moor your boat carefully, even in sheltered places, because conditions can change rapidly. **Mooring lines should be equipped with absorbers to dampen any jolts**.

To prevent abrasion, **use fenders that are large enough**.

When you land to a natural harbour, ensure that there is a sufficient distance from the shore. A moderate grip is attained if the anchor line length is **4-5 times water depth**.



WARNING

Do not try to stop the boat by hand and do not put your hand or foot between your boat and the dock, beach, or another boat.



NOTICE

The owner / user of the boat is responsible for ensuring that the boat is equipped with suitable mooring, anchoring and towing lines.

Towing

If you tow another boat, use adequately strong, floating line. Begin the towing carefully, avoid jerks, and do not overload the engine. The owner of the boat should consider the measures necessary for securing the boat's towrope.

If you are towing, or if your boat has to be towed, attach the towline to the cleat.



WARNING

When towing, the towline is under high tension. If it breaks, the speed of the end that has snapped off may rebound and cause serious injury or death.



NOTICE

When towing another boat or being towed, always drive at a low speed.

Never exceed the hull speed of a displacement craft when being towed.

© 2026 Swoop · v2.0 · 08.2026 · Відтворення, розповсюдження або переробка без письмового дозволу заборонені / Reproduction, distribution or adaptation without written permission is prohibited

Trailer transportation

Before you take boat on trailer clean the supports from sand and dirt, so they won't scratch the bottom of the boat.

The keel support of trailer should carry the most of the weight of the boat. Adjust the side supports so that boat cannot slide from side to side. Check once again that trailer is mounted to trailer hitch.

The place where the boat will be taken on the trailer should be safe from the wind and waves and ramp should continue deep enough into water. Reverse trailer so deep that the rearmost keel support is just above the water level. Drive the boat carefully towards the rearmost keel support and fasten winch cable to trailer hook. Reel up the boat on trailer in a way that boat wont slide from side to side. Remember to **trim up** motor before reeling the boat on to trailer.

Tie the boat properly before starting the transport. Fastening belts located at the bow should be directed **«down-back»** and fastening belts located at rear should be directed **«down-front»**.

Do not leave any loose equipment or extra load to boat when it's transported. Take seat cushion away and close the hatches properly.

When transporting the boat, the motor should be on its driving position. Make sure that there is **the needed road clearance**.

The fastening belts must be loosened up if the boat is kept on trailer between transportations and tightened up before next transportation.

When letting down the boat from trailer, remember to fasten the bow rope to the boat in order to release cable from the trailer hook when boat is on the water. **Look out the winch handle!**



NOTICE

Use a trailer suitable for the boat and its mass.

The trailer should be a little front-weighted.

Make sure that the boat is fastening tight enough to trailer and the weight of the boat is divided equally on the both side supports. If the boat swings against the side support, it can damage the hull.

© 2026 Swoop · v2.0 · 08.2026 · Відтворення, розповсюдження або переробка без письмового дозволу заборонені / Reproduction, distribution or adaptation without written permission is prohibited

Servicing and maintenance

Maintain your boat and its components clean. It will make your boat more comfortable to use and increases the real sale value of the boat.

Familiarize yourself with the service procedures shown in the engine manual.

Carry out the service carefully, or ensure it is performed by an accredited service company.

Cleaning

It is recommended to use only biodegradable products during cleaning.

Care instructions for the remote control

Normally the remote control needs no other maintenance than greasing and adjustment during the winter service. If, for any reason, it becomes stiff to operate, it needs to be serviced immediately.

Care instructions for the steering system

Normally the steering system does not need to be serviced.

Care instructions for the electrical components

Electrical components, like main switches, other switches and couplings does not normally need to be serviced if the boat is winter stored in dry and well-ventilated place. The best way to protect electrical components against oxidation is to spraying them every now and then with a moisture repellent antioxidant.

© 2026 Swoop · v2.0 · 08.2026 · Відтворення, розповсюдження або переробка без письмового дозволу заборонені / Reproduction, distribution or adaptation without written permission is prohibited

Winter storage

Preparing boats for winter storage is an annual autumnal routine. Have your boat lifted in good time before the water freezes. It is advisable to perform all maintenance repair and inspection procedures when lifting the craft.

Please familiarize yourself with the servicing instructions provided in the engine manual.

We recommend that you leave them to an authorized service agent. Do not forget to service the remote control and steering system. Make sure to perform their maintenance according to separate instructions and manuals.

Wash the bottom of the boat immediately after the boat has been lifted. Algae and slime will come off easier if they are not left to dry. Give the engine, and other accessories – following separate manuals, their winter service. If your boat is stored outside or in a humid place during the winter, remove the textiles and other equipment that may corrode or become mouldy in damp conditions. Wash the ropes in fresh water. Replace ropes that are worn. Remove drain plug for the winter.

Measures before launching

In coastal areas an antifouling paint should be used to prevent the hull from becoming covered. Fouling of the bottom and especially the propeller increases the fuel consumption remarkably.

However, if the boat is anchored at the inlet of a stream, on a land locked lake, or if it is lifted out of the water at least once a week, it is normally not necessary to use an antifouling paint. Carefully follow the paint manufacturer's instructions when applying the antifouling paint. If you are sanding old antifouling paint, remember that the dust is toxic.



NOTICE

Do not apply any paint to the zinc anodes, log sensor, or piston rods of hydraulic trim tabs. Do not apply paints containing copper on aluminium parts and remember to follow the paint manufacturer's instructions.

Perform the necessary service procedures according to the engine manual. Check the function of electric equipment and remove possible oxidation from fuse connectors.

Remember that eventually, petrol turns stale in time, and that you should always use fresh fuel when starting the engine for the first time after winter storage.

© 2026 Swoop · v2.0 · 08.2026 · Відтворення, розповсюдження або переробка без письмового дозволу заборонені / Reproduction, distribution or adaptation without written permission is prohibited

© 2026 Swoop · v2.0 · 08.2026 · Відтворення, розповсюдження або переробка без письмового дозволу заборонені / Reproduction, distribution or adaptation without written permission is prohibited

Swoop

LCC “Swoop Manufacturing”

72 Chumatskyi Shliakh St.
Obukhiv
Obukhiv District
Kyiv Region
08700
UKRAINE

www.swoop.boats

© 2026 Swoop · v2.0 · 08.2026 · Відтворення, розповсюдження або переробка без письмового дозволу заборонені / Reproduction, distribution or adaptation without written permission is prohibited